SMP658CNEIXL - ACO 654 NE

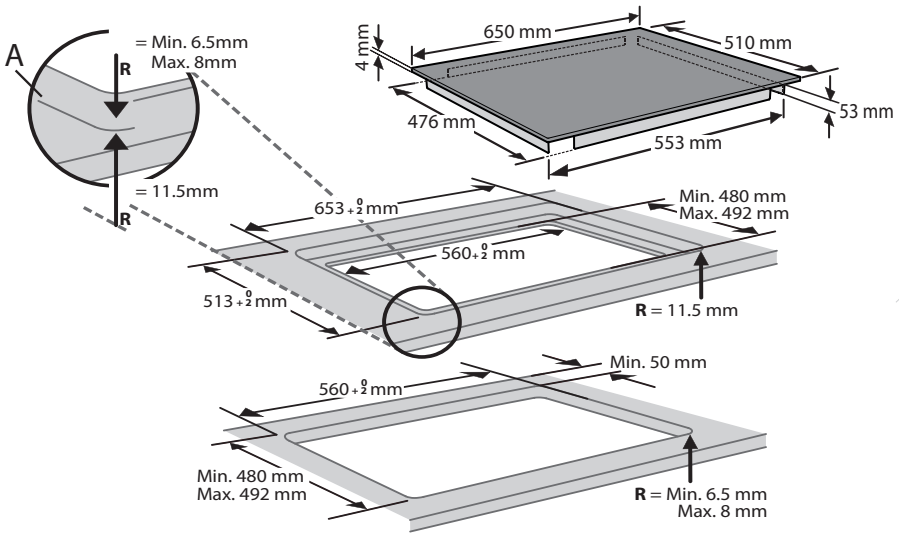

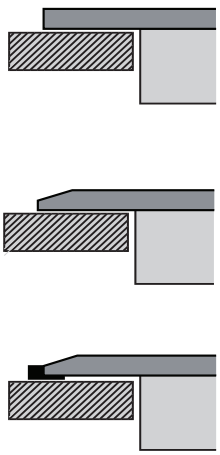

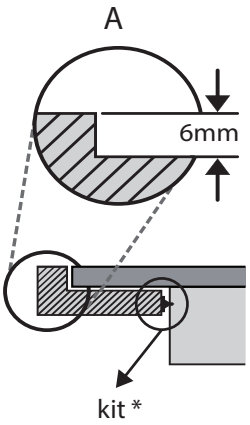

ACP 778 C/BA

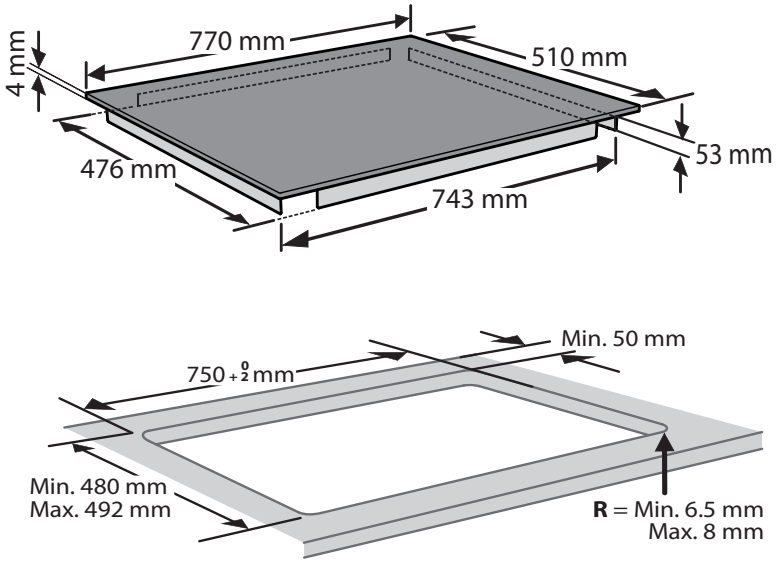



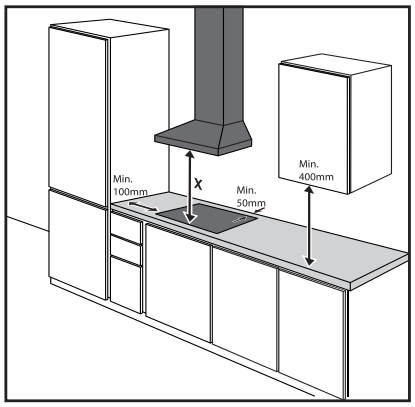
Min.
100mm
x
Min.
50mm
Min.
400mm

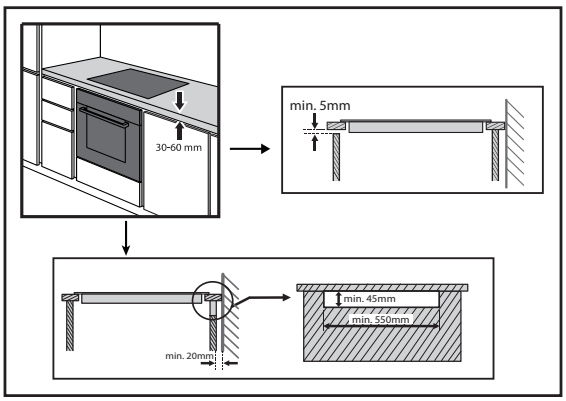
30-60 mm
min. 5mm
min. 45mm
min. 550mm
min. 20mm

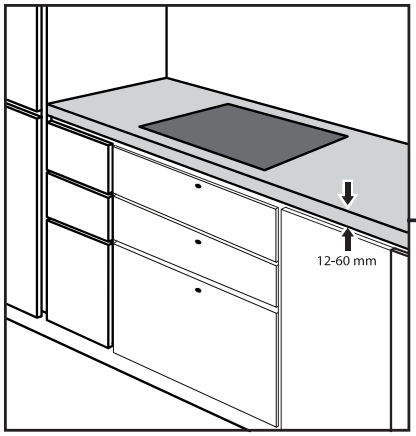
12-60 mm

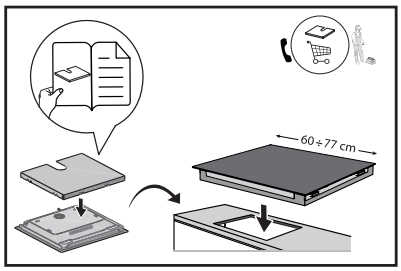
60÷77 cm

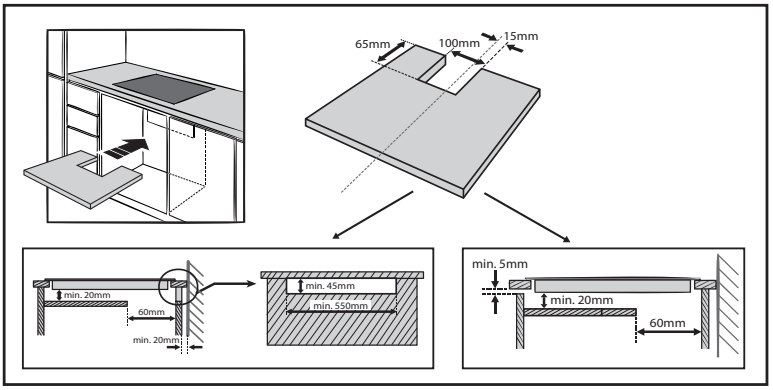
65mm
100mm
15mm
min. 20mm
60mm
min. 20mm
min. 45mm
min. 550mm
min. 5mm
min. 20mm
60mm



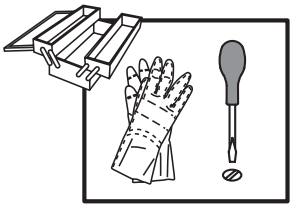

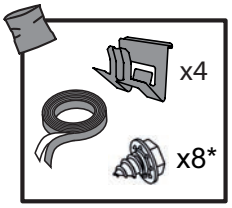
x4
x8*

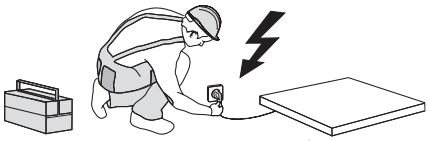

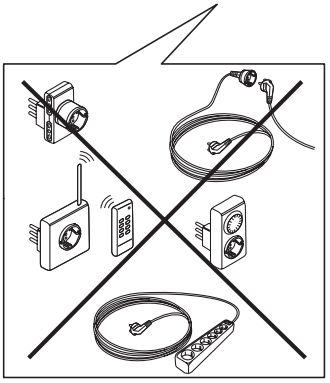

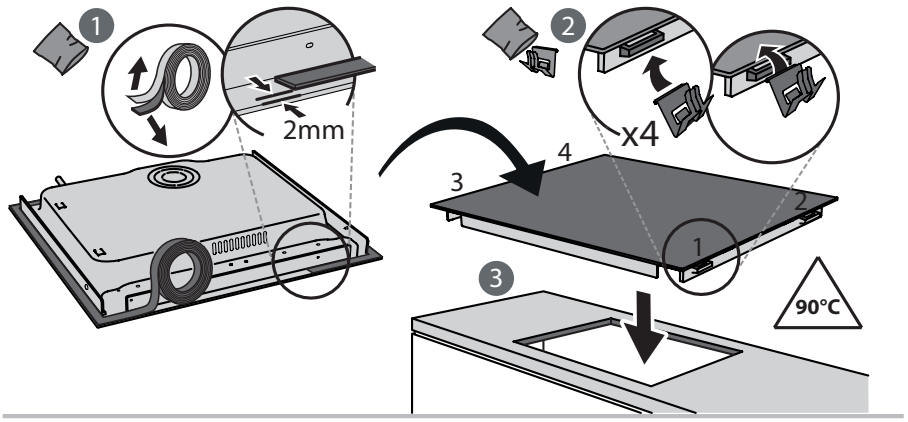
1
2mm
2
x4
4
3
2
1
3
90°C

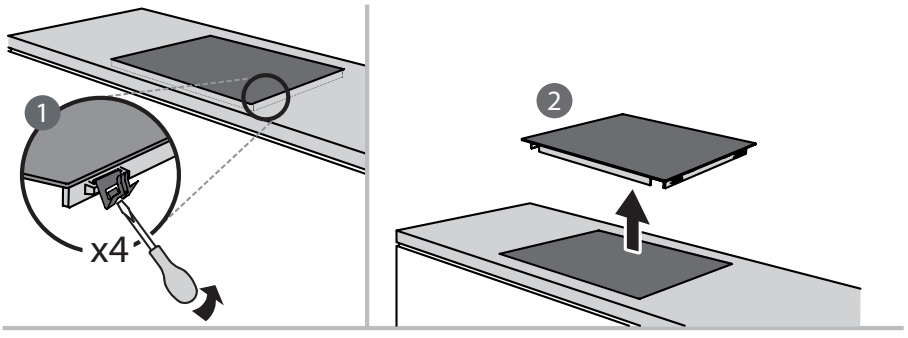
1
x4
2

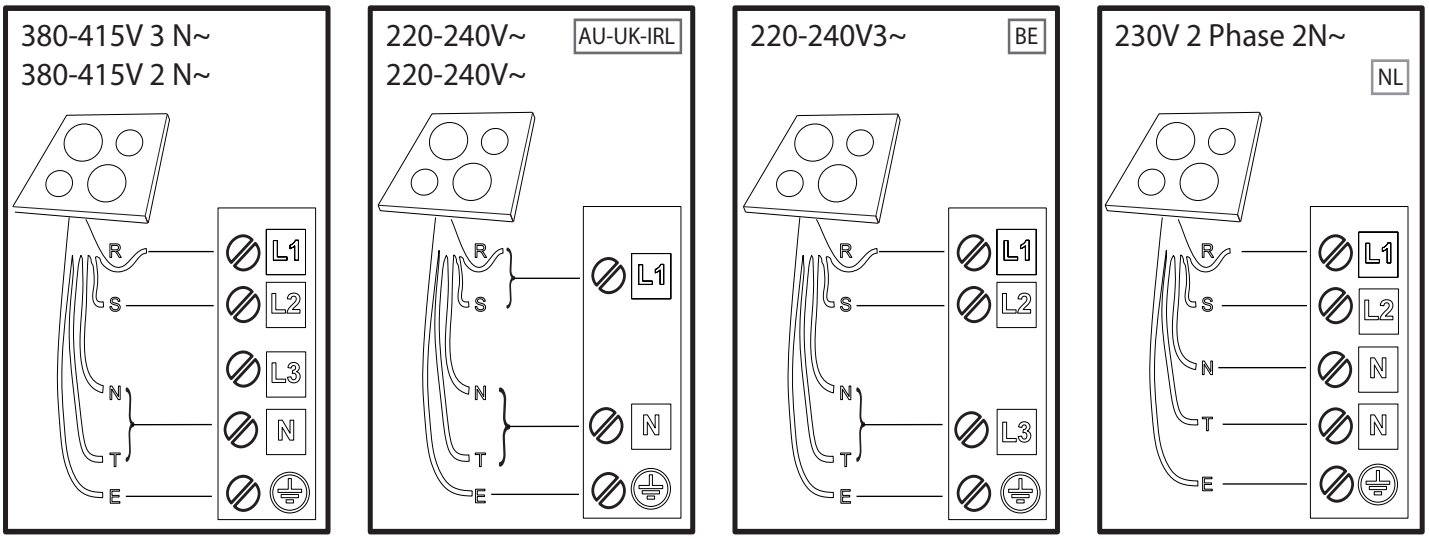

R

black-nero-negro-preto-μαύρος-must-melns-juodas-czarny-schwarz-noir-zwart-negru
черно-црн-černa-crno-черный-чорний-қара-černá-čierna-fekete-svart-musta-svart-sort
siyah-dubh

S

brown-marrone-marrón-marrom-καφέ-pruun-brūns-rudas-brązowy-braunen-brun-bruin
maro-кафяв-браон-rjava-smeđ-коричневый-коричневий-қоңыр-hnědý-hnedý-barna
brunt-ruskea-brunt-brun-kahverengi-donn

T

blue (gray)-blu (grigio)-azul (gris)-azul (cinza)-μπλε (γκρι)-sinine (hall)-zila (pelēka)
mėlyna(pilkas)-niebieski (szary)-blau (grau)-bleu (gris)-blauw (grijs)-albastru (gri)
синьо (сиво)-плава (сива)-modro(sivo)-plava (siva)-синий (серый)-синій (сірий)
көк (сұр)-modrý (šedá)-modrý(sivá)-kék (szürke)-blå (grå)-sininen (harmaa)-blå (grå)
blåt (gråt)-mavi (gri)-gorm (liath)

⏚ = E

yellow/green-giallo/verde-amarillo/verde-amarelo/verdekίτριvo/πράσινο-kollane/roheline
dzeltens/zaļš-geltona/žalia-żółty/zielony-gelb/grün-jaune/vert-geel/groen-galben/verde
жълто/зелено-жуто/зелена-rumeno/zeleno-žuto/zelena-желтый/зеленый-gul/grønn
жовтий/зелений-жасыл/сары-žlutá/zelená-žltá/zelená-sárga/zöld-keltainen/vihreä
gul/grön-gul/grøn-sarı/yeşil-buí/glas

N

blue-blu-azul-azul-μπλε-sinine-zila-mėlyna-niebieski-blau-bleu-blauw-albastru-синьо
плава-modro-plava-синий-синій-көк-modrý-modrý-kék-blå-sininen-blå-blåt-mavi-gorm

* Available only on certain models - Налично само при определени модели - Dostupné pouze u určitých modelů - Kun disponibel på visse modeller - Nur für bestimmte Modelle erhältlich - Διατίθεται μόνο σε ορισμένα μοντέλα - Disponible en determinados modelos solamente - Saadaval ainult teatud mudelitel - Saatavana vain eräissä malleissa - Disponible sur certains modèles seulement - Dostupno samo na određenim modelima - Kizárólag bizonyos típusok esetén - Disponibile solo su alcuni modelli - Tik tam tikruose modeliuose - Pieejams tikai atsevišķiem modeļiem - Alleen verkrijgbaar voor bepaalde modellen - Kun tilgjengelig på noen modeller - Dostępne tylko w wybranych modelach - Disponível apenas em determinados modelos - Disponibile numai la anumite modele - K dispozícii len na niektorých modeloch - Na voljo le pri določenih modelih - Dostupno samo na određenim modelima - Endast på vissa modeller - Доступно лише в деяких моделях متاحة في بعض الموديلات فقط - מינוח רק בדגמים מסוימים

SAFETY INSTRUCTIONS

IMPORTANT TO BE READ AND OBSERVED

Before using the appliance, read these safety instructions. Keep them nearby for future reference.
These instructions and the appliance itself provide important safety warnings to be observed at all times. The manufacturer declines any liability for failure to observe these safety instructions, for inappropriate use of the appliance or incorrect setting of controls.
⚠ WARNING: If the hob surface is cracked, do not use the appliance - risk of electric shock.
⚠ WARNING: Danger of fire: Do not store items on the cooking surfaces.
⚠ CAUTION: The cooking process has to be supervised. A short cooking process has to be supervised continuously.
⚠ WARNING: Unattended cooking on a hob with fat or oil can be dangerous - risk of fire. NEVER try to extinguish a fire with water: instead, switch off the appliance and then cover flame e.g. with a lid or a fire blanket.
⚠ Do not use the hob as a work surface or support. Keep clothes or other flammable materials away from the appliance, until all the components have cooled down completely - risk of fire.
⚠ Metallic objects such as knives, forks, spoons and lids should not be placed on the hob surface since they can get hot.
⚠ Very young children (0-3 years) should be kept away from the appliance. Young children (3-8 years) should be kept away from the appliance unless continuously supervised. Children from 8 years old and above and persons with reduced physical, sensory or mental capabilities or lack of experience and knowledge can use this appliance only if they are supervised or have been given instructions on safe use and understand the hazards involved. Children must not play with the appliance. Cleaning and user maintenance must not be carried out by children without supervision.
⚠ After use, switch off the hob element by its control and do not rely on the pan detector.
⚠ WARNING: The appliance and its accessible parts become hot during use. Care should be taken to avoid touching heating elements. Children less than 8 years of age shall be kept away unless continuously supervised.
⚠ The food must not be left in or on the product for more than one hour before or after cooking.

PERMITTED USE

⚠ CAUTION: the appliance is not intended to be operated by means of an external switching device, such as a timer, or separate remote controlled system.
⚠ This appliance is intended to be used in household and similar applications such as: staff kitchen areas in shops, offices and other working environments; farm houses; by clients in hotels, motels, bed & breakfast and other residential environments.
⚠ No other use is permitted (e.g. heating rooms).
⚠ This appliance is not for professional use. Do not use the appliance outdoors.
⚠ WARNING: Induction hob may generate the acoustic sound when something is left on the control panel. Switch off the cooktop through the ON/OFF button.

INSTALLATION

⚠ The appliance must be handled and installed by two or more persons - risk of injury. Use protective gloves to unpack and install - risk of cuts.
⚠ Installation, including water supply (if any), electrical connections and repairs must be carried out by a qualified technician. Do not repair or replace any part of the appliance unless specifically stated in the user manual. Keep children away from the installation site. After unpacking the appliance, make sure that it has not been damaged during transport. In the event of problems, contact the dealer or your nearest After-sales Service. Once installed, packaging waste (plastic, styrofoam parts etc.) must be stored out of reach of children - risk of suffocation. The appliance must be disconnected from the power supply before any installation operation - risk of electric shock. During installation, make sure the appliance does not damage the power cable - risk of fire or electric shock. Only activate the appliance when the installation has been completed.
⚠ Carry out all cabinet cutting operations before fitting the appliance and remove all wood chips and sawdust.
⚠ If the appliance is not installed above an oven, a separator panel (not included) must be installed in the compartment under the appliance.

ELECTRICAL WARNINGS

⚠ It must be possible to disconnect the appliance from the power supply by unplugging it if plug is accessible, or by a multi-pole switch installed upstream of the socket in accordance with the wiring rules and the appliance must be earthed in conformity with national electrical safety standards.
⚠ Do not use extension leads, multiple sockets or adapters. The electrical components must not be accessible to the user after installation. Do not use the appliance when you are wet or barefoot. Do not operate this appliance if it has a damaged power cable or plug, if it is not working properly, or if it has been damaged or dropped.
⚠ Installation using a power cable plug is not allowed unless the product is already equipped with the one provided by the Manufacturer.
⚠ If the supply cord is damaged, it must be replaced with an identical one by the manufacturer, its service agent or similarly qualified persons in order to avoid a hazard - risk of electric shock.

CLEANING AND MAINTENANCE

⚠ WARNING: Ensure that the appliance is switched off and disconnected from the power supply before performing any maintenance operation; never use steam cleaning equipment - risk of electric shock.
⚠ Do not use abrasive or corrosive products, chlorine-based cleaners or pan scourers.

DISPOSAL OF PACKAGING MATERIALS

The packaging material is 100% recyclable and is marked with the recycle symbol .

The various parts of the packaging must therefore be disposed of responsibly and in full compliance with local authority regulations governing waste disposal.

DISPOSAL OF HOUSEHOLD APPLIANCES

This appliance is manufactured with recyclable or reusable materials. Dispose of it in accordance with local waste disposal regulations. For further information on the treatment, recovery and recycling of household electrical appliances, contact your local authority, the collection service for household waste or the store where you purchased the appliance. This appliance is marked in compliance with European Directive 2012/19/EU, Waste Electrical and Electronic Equipment (WEEE) and with the Waste Electrical and Electronic Equipment regulations 2013 (as amended).

By ensuring this product is disposed of correctly, you will help prevent negative consequences for the environment and human health.

The symbol on the product or on the accompanying documentation indicates that it should not be treated as domestic waste but must be taken to an appropriate collection center for the recycling of electrical and electronic equipment.

ENERGY SAVING TIPS

Make the most of your hot plate's residual heat by switching it off a few minutes before you finish cooking.

The base of your pot or pan should cover the hot plate completely; a container that is smaller than the hot plate will cause energy to be wasted.

Cover your pots and pans with tight-fitting lids while cooking and use as little water as possible. Cooking with the lid off will greatly increase energy consumption.

Use only flat-bottomed pots and pans.

DECLARATION OF CONFORMITY

This appliance meets Ecodesign requirements of European Regulation 66/2014 and The Ecodesign for Energy-Related Products and Energy Information (Amendment) (EU Exit) Regulations 2019 in compliance with the European standard EN 60350-2.

The information related to low power mode of the appliance in accordance with Regulation (EU) 2023/826 can be found in the following link: https://docs.emeaappliance-docs.eu.

NOTE

People with a pacemaker or similar medical device should use care when standing near this induction cooktop while it is on. The electromagnetic field may affect the pacemaker or similar device. Consult your doctor, or the manufacturer of the pacemaker or similar medical device for additional information about its effects with electromagnetic fields of the induction cooktop.





400011719004-B