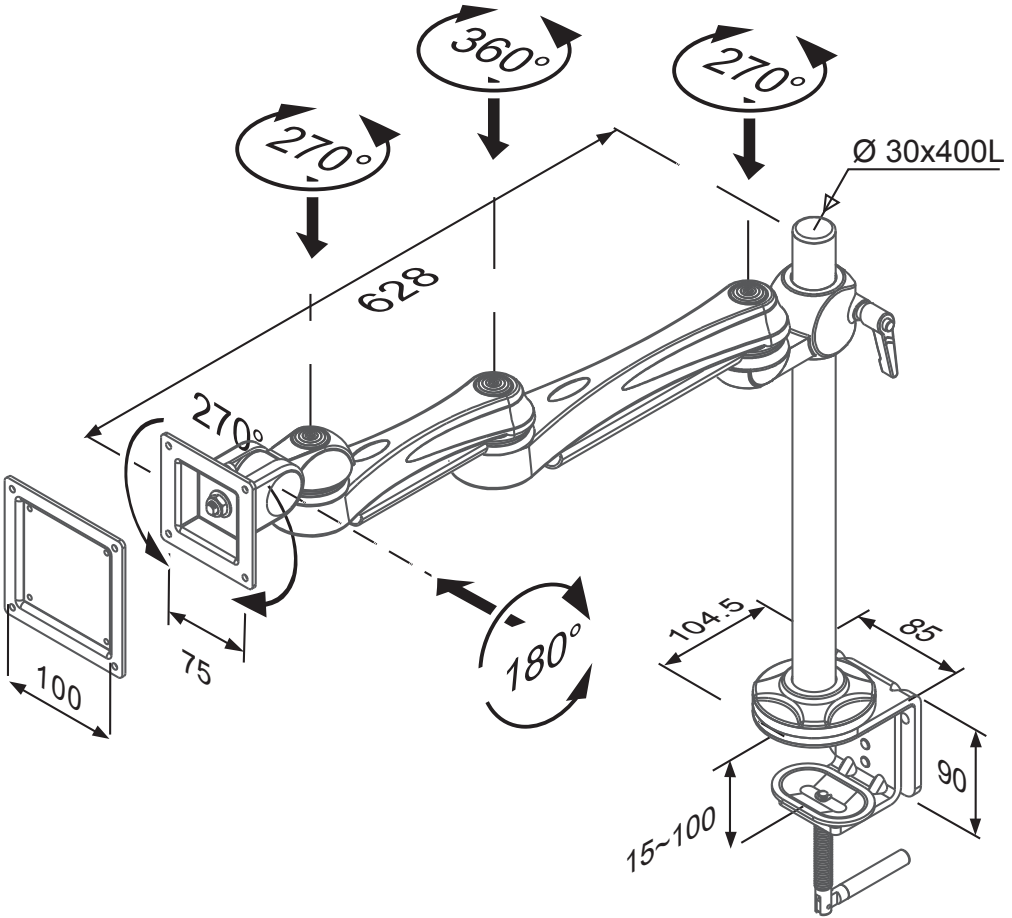
360°
270°
270°
Ø 30x400L
628
270°
180°
104.5
85
75
100
90
15~100