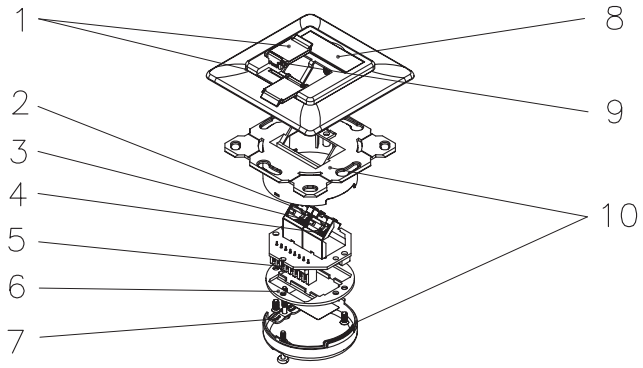

SCALE 1/4

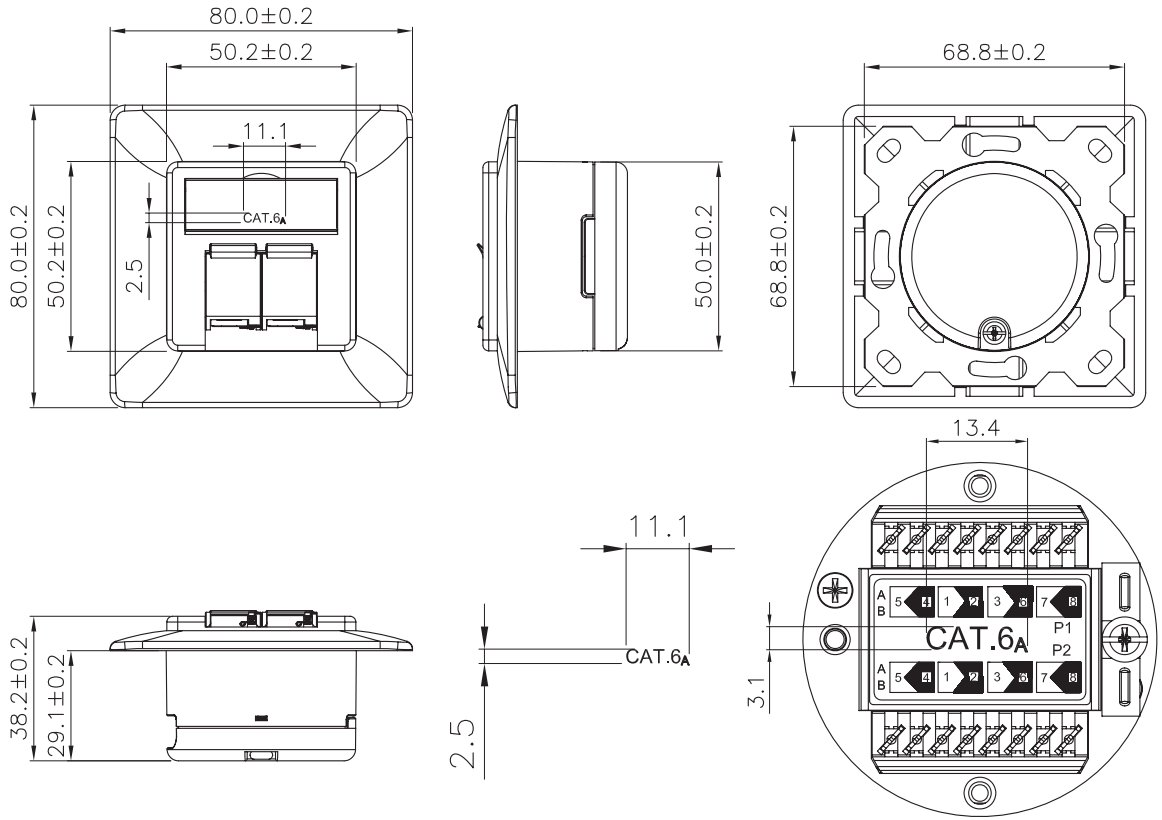

SCALE 1/1

Specification :

Material :
1. Plate : ABS, UL 94-HB.
2. RJ45 Jack :
   2-1. Housing : PBT+Glass Fiber, UL 94V-0.
   2-2. Contact Bracket : PBT+Glass Fiber, UL 94V-0.
   2-3. Cover : PBT+Glass Fiber, UL 94V-0.
3. RJ45 Jack Shield : Bronze with Nickel plated.
4. RJ45 Jack Contact :
   4-1. Material : Phosphor Bronze with Nickel plated.
   4-2. Finish : 50 micro-inch Gold plated on Plug contact area.
5. IDC :
   5-1. Housing : PC+Glass Fiber, UL 94V-0.
   5-2. Terminal : Phosphor Bronze with Tin plated.
6. Bracket : ABS, UL 94-HB.
7. Fastener : SPCC, 1.2mm thickness with 5~8um Nickel plated.
8. Identification :
   8-1. Paper.
   8-2. I.D. Plate : PC, UL 94V-2.
9. Spring : SUS.
10. Shield : Zinc Die-casting.
11. PCB : FR4, UL 94V-0.

Performance :
a. T568A & T568B wiring sticker.
b. Insertion Force : 30N max. (IEC 60603-7-5)
c. Retention strength : 7.7 kg between Jack and Plug.
d. Operating temperature : -10°C to 60°C. (ISO/IEC 11801, ANSI/TIA/EIA 568 B.2)
e. Life(mating cycles) :
   Jack : 750 cycles min. (ISO/IEC 11801, IEC 60603-7-5)
   IDC : Suitable for 22-24 AWG stranded and solid wire, compatible with Krone punch down tool.
f. The CAT.6A channel transmission performance is in compliance with TIA/EIA 568C.2 10G & ISO/IEC 11801 standard.

GENERAL TOLERANCE OF DIMENSIONS X.XXX ±0.005 X.XX ±0.05 X.X ±0.1	DRAWING	19.OCT.2010	CXC	equip
	CHECK	19.OCT.2010	JANE	
	APPROVAL	19.OCT.2010	JAIMY	
		DATE	NAME	
	SCALE 1/2(A4)	UNIT mm		DES.: CAT6A FULL SHIELDED GERMAN FACE PLATE
	DRAWING NO.			
	DRAWING CLASSIFICATION	S	SHEET 1 OF 1	A3