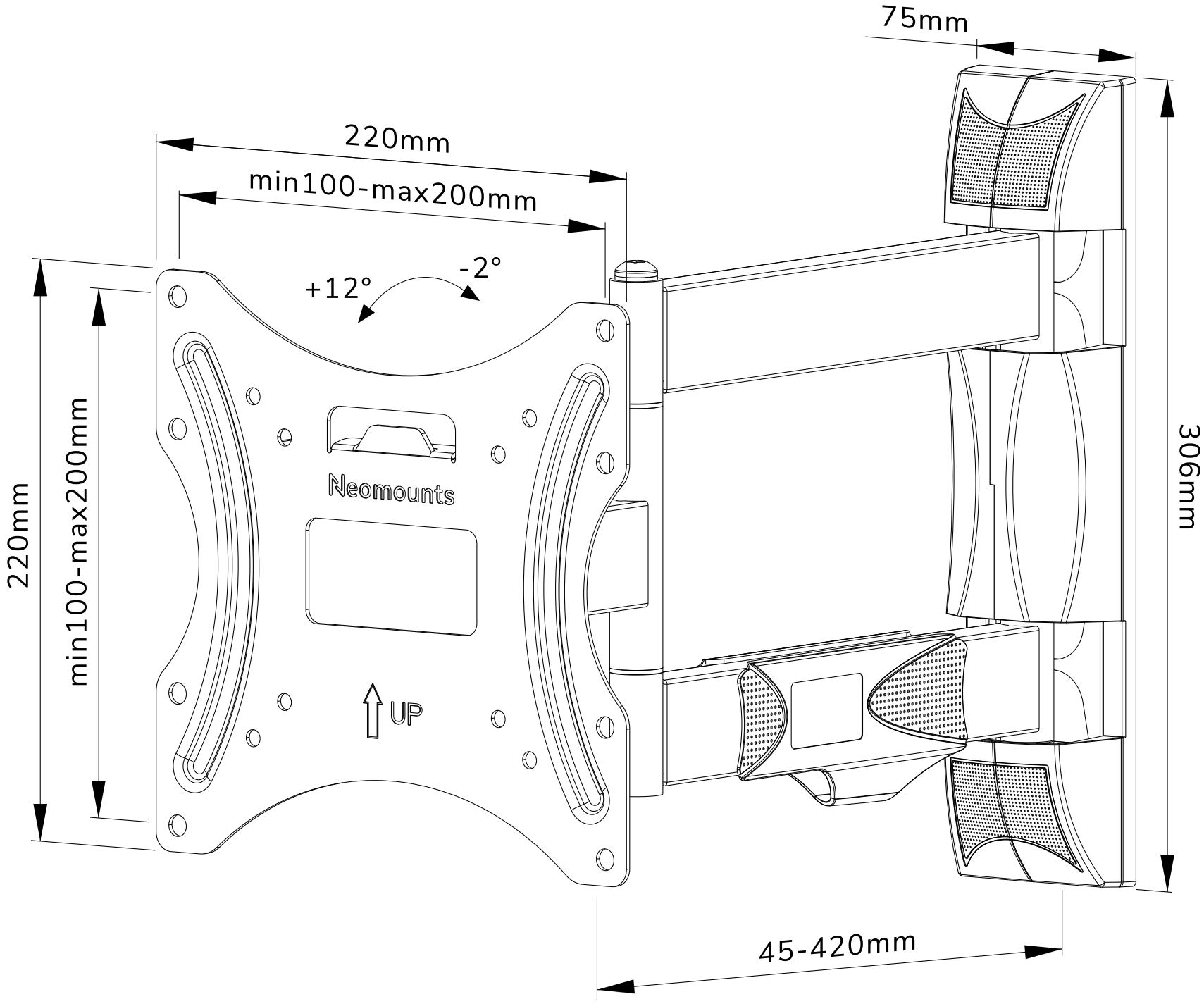
75mm
220mm
min100-max200mm
+12°
-2°
220mm
min100-max200mm
Neomounts
UP
306mm
45-420mm