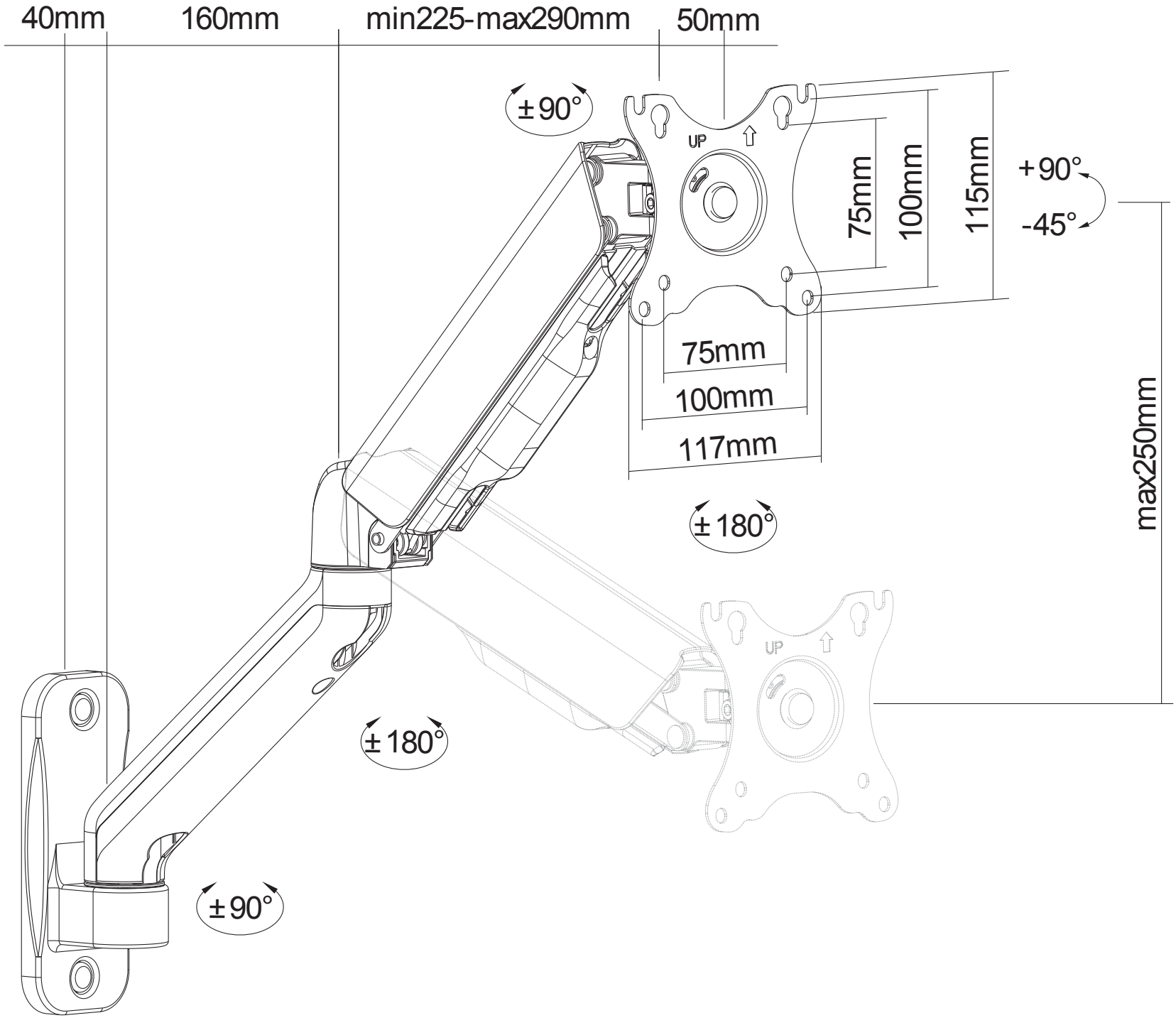
40mm
160mm
min225-max290mm
50mm
±90°
UP
75mm
100mm
115mm
+90°
-45°
75mm
100mm
117mm
max250mm
±180°
UP
±180°
±90°