Built-in Oven

User Manual

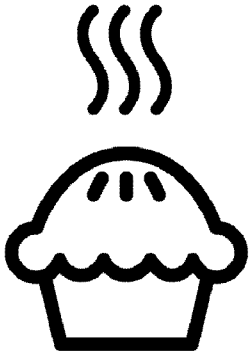

BBIE12300XFP-BBIE13301XFP

EN

385.4415.10/R.AC/8.12.2021/2-2
7739182919-7757787655

Dear Customer,

Please read this manual before using the product.
Beko thank you for choosing the product. We want your product, manufactured with high quality and technology, to offer you the best efficiency. To do this, carefully read this manual and any other documentation provided before using the product and keep it as a reference. If you give the product to someone else, give the manual with it. Follow the instructions, taking into account all the information and warnings stated in the user manual.
Heed all information and warnings in the user manual. This way, you will protect yourself and your product against the dangers that may occur.
Keep the user manual. If you give the product to someone else, give the manual with it.
The user manual contains the following symbols:

Hazard that may result in death or injury.
NOTICE Hazard that may result in material damage to the product or its environment.

Hazard that may result in burns due to contact with hot surfaces.

Important information or useful usage tips.

Read the user manual.

Arçelik A.Ş.
Karaağaç caddesi No:2-6
34445 Sütlüce/Istanbul/TURKEY
Made in TURKEY

CE

This product was manufactured using the latest technology in environmentally friendly conditions.

TABLE OF CONTENTS

1 Safety instructions 4

Purpose of usage 4
Child, vulnerable person and pet safety 4
Electrical safety 5
Transportation safety 7
Installation safety 7
Safety of use 7
Temperature warnings 8
Accessory use 8
Cooking safety 9
Maintenance and cleaning safety 9
High temperature self-cleaning (Pyrolysis) 10

2 Environmental Instructions 11

Waste regulation 11
Compliance with the WEEE Directive and Disposing of the Waste Product 11
Package information 11
Recommendations for energy saving 11

3 Your product 12

Product introduction 12
Product control panel introduction and usage 13
Oven control 13
Oven operating functions 14
Product accessories 15
Use of product accessories 16
Technical specifications 19

4 First use 20

First time setting 20
First cleaning 20

5 How to operate the oven 22

General information on oven usage 22
Operation of the oven control unit 22
Settings 25

6 General information about cooking 28

General warnings about cooking in the oven 28
Pastries and oven food 28
Meat, Fish and Poultry 31
Grill 31
Test foods 33

7 Maintenance and care 34

General cleaning information 34
Cleaning the accessories 35
Cleaning the control panel 35
Cleaning the inside of the oven (cooking area) 35
Pyrolytic self-cleaning 36
Cleaning the oven door 37
Removing the inner glass of the oven door 39
Cleaning the oven lamp 40

8 Troubleshooting 42

1 Safety instructions

- This section contains safety instructions that will help prevent any risks of personal injuries or material damage.
- If the product is transferred to another person or used second hand, the operating manual, product labels, other relevant documents and accessories should be delivered with the product.
- Our company shall not be held responsible for any damage that may occur as a result of failure to comply with these instructions.
- Failure to comply with these instructions shall render any warranty void.
- ⚠ Always have the installation and repair work performed by the manufacturer, the authorized service or a person specified by the importer.
- ⚠ Use genuine spare parts and accessories only.
- ⚠ Do not attempt to repair or replace any part of the product unless it is clearly specified in the operating manual.
- ⚠ Do not perform technical modifications on the product.

⚠ Purpose of usage

- This product is designed for home use. It is not suitable for commercial use.
- Do not use the product in gardens, balconies or other outdoor environments. The appliance is intended to be used in household and staff kitchen areas in shops, offices and other working environments.
- **WARNING:** This product should be used for cooking purposes only. It should not be used for different purposes, such as heating the room.
- The oven can be used to defrost, bake, fry and grill food.
- This product; should not be used for heating, plate heating, hanging towels or clothes on the handle for drying.

⚠ Child, vulnerable person and pet safety

- This product can be used by children 8 years of age and

older, and people who are underdeveloped in physical, sensory or mental skills, or lack of experience and knowledge, as long as they are supervised or trained about the safe use and hazards of the product.
- Children should not play with the product. Cleaning and user maintenance should not be performed by children unless there is someone overseeing them.
- This product should not be used by people with limited physical, sensory or mental capacity (including children), unless they are kept under supervision or receive the necessary instructions.
- Children should be supervised to ensure that they do not play with the product.
- Electrical products are dangerous for children and pets. Children and pets must not play with, climb on, or enter the product.
- Do not put objects that children may reach on the product.
- **WARNING:** During use, the accessible surfaces of the product are hot. Keep children away from the product.
- Keep the packaging materials out of the reach of children. There is a hazard of injury and suffocation.
- When the door is open, do not put any heavy objects on it or allow children to sit on it. You may cause the oven to tip over or damage the door hinges.
- **(Not all products are supplied with a plug, so if your product DOES have a plug)** For the safety of children, disconnect the power plug and make the product inoperable before disposing of the product.

Electrical safety

- Connect the product into a grounded outlet protected by a fuse that matches the current ratings indicated on the type label. Have the grounding installation made by a qualified electrician. Do not use the product without grounding in accordance with local / national regulations.
- The plug or the electrical connection of the product

should be in an easily accessible place (where it will not be affected by the flame of the stove). If this is not possible, there should be a mechanism (fuse, switch, switch, etc.) on the electrical installation to which the product is connected, in compliance with the electrical regulations and separating all poles from the network.

- The product must not be connected into the outlet during installation, repair, and transportation.
- Connect the product into an outlet that meets the voltage and frequency values specified on the type label.
- **(Not all products are supplied with a supply cord, so if your product DOES NOT have a supply cord)** Use only the connecting cable specified in the "Technical specifications" section.
- Do not jam the power cord under and behind the product. Do not put a heavy object on the power cord. The power cord should not be bent, crushed, and come into contact with any heat source.
- While the oven is operating, its back surface also gets hot. Power cords must not touch the back surface, connections may be damaged.
- Do not jam the electric cables into the oven door and pass them over hot surfaces. You may cause the oven to short circuit and catch fire as a result of the cable melting.
- Use original cable only. Do not use cut or damaged cables or extension leads.
- If the power cord is damaged, it must be replaced by a manufacturer, an authorized service or a person to be specified by the importer company in order to prevent possible dangers.
- **WARNING:** Before replacing the oven lamp, be sure to disconnect the product from the mains supply to avoid the risk of electric shock. Switch off the product or turn off the fuse from the fuse box.

(Not all products are supplied with a plug, so if your product DOES have a plug)

- Do not plug the product into an outlet that is loose, has come out of its socket, is broken, dirty, oily, with risk of water contact (for example, water that may leak from the counter).
- Never touch the plug with wet hands! To unplug, do not hold the cord, always hold the plug.
- Make sure that the product plug is securely plugged into the outlet to avoid arcing.

⚠ Transportation safety

- Disconnect the product from the mains before transporting the product.
- The product is heavy, carry the product with at least two people.
- Do not use the door and / or handle to transport or move the product.
- Do not put other items on the product and carry the product upright.
- When you need to transport the product, wrap it with bubble wrap packaging material or thick cardboard and tape it tightly. Secure the product tightly with tape to prevent the removable or moving parts of the product and the product from damage.
- Check the overall appearance of the product for any damage that may have occurred during transportation.

⚠ Installation safety

- Before the product is installed, check the product for any damage. If the product is damaged, do not install it.
- Do not install the product near heat sources (radiators, stoves, etc.).
- Keep all ventilation ducts open around the product.
- To prevent overheating, the product should not be installed behind decorative doors.

⚠ Safety of use

- Make sure that the product is turned off after each use.
- If you do not use the product for a long time, disconnect it or turn off the fuse from the fuse box.

- Do not operate defective or damaged product. If any, disconnect the electricity / gas connections of the product and call the authorized service.
- Do not use the product with the front door glass removed or broken.
- Do not climb on the product to reach anything or for any other reason.
- Do not use the product in situations that may affect your judgment, such as drug intake and / or alcohol use.
- Flammable objects kept in the cooking area may catch fire. Never store flammable objects in the cooking area.
- The oven handle is not a towel dryer. When using the product, do not hang towels, gloves or similar textiles.
- The hinges of the product door move and tighten when opening and closing the door. When opening / closing the door, do not hold the part with the hinges.

⚠ Temperature warnings

- **WARNING:** While the product is operating, exposed parts will be hot. Do not touch the product and heating elements. Children under the age of 8 should not be brought close to the product without an adult.
- Do not place flammable / explosive materials near the product, as the edges will be hot while it is operating.
- As steam may be exhaled, keep away while opening the oven door. The steam may burn your hand, face and / or eyes.
- The product may be hot during use. Do not touch the hot compartments, the interior parts of the oven, the heating elements, etc.
- When placing food in the hot oven, removing the food, etc. always use heat resistant oven gloves.

⚠ Accessory use

- It is important that the wire grill and tray are placed properly on the wire shelves. For detailed information, refer to the section "Usage of accessories".
- Accessories can damage the door glass when closing the product door. Always push

the accessories to the end of the cooking area.

Cooking safety

- Be careful when using alcohol in your food. Alcohol evaporates at high temperatures and may catch fire when exposed to hot surfaces, causing a fire.
- Food waste, oil, etc. in the cooking area may catch fire. Before cooking, remove such coarse dirt.
- Food Poisoning Hazard: Do not keep food in the oven for more than an hour before and after cooking. Otherwise it may cause food poisoning or diseases.
- Do not heat closed tin cans and glass jars. Built up pressure may cause the jar to burst.
- Place the greaseproof paper in a cookware or on the oven accessory (tray, wire grill, etc.) with food and place it in the preheated oven. Remove any excessive pieces of greaseproof paper hanging from the accessory or container to avoid the risk of touching the oven heating elements. Never use greaseproof paper at an oven temperature higher than the maximum use temperature specified on the greaseproof paper you are using. Never place greaseproof paper on the oven base.
- Do not place baking trays, plates or aluminum foil directly on the bottom of the oven. The accumulated heat can damage the base of the oven.
- Close the oven door during grilling. Hot surfaces may cause burns!
- Food not suitable for grilling carries a fire hazard. Grill only food that is suitable for heavy grill fire. Also, do not place the food too far in the back of the grill. This is the hottest area and fatty foods may catch fire.

Maintenance and cleaning safety

- Wait for the product to cool before cleaning the product. Hot surfaces may cause burns!
- Never wash the product by spraying or pouring water on it! There is an electric shock hazard!

- Do not clean the product with steam cleaners as this may cause electric shock.
- Do not use harsh abrasive cleaners, metal scrapers, wire wool or bleach materials to clean the oven front door glass / (if present) oven upper door glass. These materials can cause glass surfaces to be scratched and broken.
- Always keep the control panel clean and dry. A damp and dirty surface may cause problems in operating the functions.

High temperature self-cleaning (Pyrolysis)

- During self-cleaning, the surfaces become hotter than in standard use. Keep children away.
- Hot surfaces cause burns! Do not touch the product during self-cleaning and keep children away from the product. Wait at least 30 minutes before removing the residue.
- During self-cleaning, smoke will be released due to the burning of food residues. Ventilate your kitchen well during the cleaning process.
- Before starting the cleaning, clean the outer surfaces of the oven and the food residues inside the oven with soapy cloth. Remove all accessories and cooking utensils from the oven. If your product has a pyro proof accessory (resistant to high temperature self-cleaning), you do not need to remove these accessories from the oven.
- If there is a hob on your oven, do not operate the hob during self-cleaning.

2 Environmental Instructions

Waste regulation

Compliance with the WEEE Directive and Disposing of the Waste Product



This product complies with EU WEEE Directive (2012/19/EU). This product bears a classification symbol for waste electrical and electronic equipment (WEEE).

This product has been manufactured with high quality parts and materials which can be reused and are suitable for recycling. Do not dispose of the waste product with normal domestic and other wastes at the end of its service life. Take it to the collection center for the recycling of electrical and electronic equipment. Please consult your local authorities to learn about these collection centers.
Appropriate disposal of used appliance helps prevent potential negative consequences for the environment and human health.

Compliance with RoHS Directive:
The product you have purchased complies with EU RoHS Directive (2011/65/EU). It does not contain harmful and prohibited materials specified in the Directive.

Package information

- Packaging materials of the product are manufactured from recyclable materials in accordance with our National Environment Regulations. Do not dispose of the packaging materials together with the domestic or other wastes. Take them to the packaging material collection points designated by the local authorities.

Recommendations for energy saving

Information on energy efficiency according to EU 66/2014 can be found on the product fiche given with the product. The following suggestions will help you use your product in an ecological and energy-efficient way:

- Defrost frozen food before cooking.
- In the oven, use dark or enamelled containers that transmit heat better.
- Turn off the product 5 to 10 minutes before the end time of cooking for prolonged cooking. Now you can save up to 20% electricity by using heat.
- If specified in the recipe or user manual, always preheat. Do not open the oven door frequently during cooking.
- Try to cook more than one dish at a time in the oven. You can cook at the same time by placing two cooking containers on the wire shelf. In addition, if you cook your meals one after the other, it will save energy because the oven will not lose its heat.

3 Your product

Product introduction

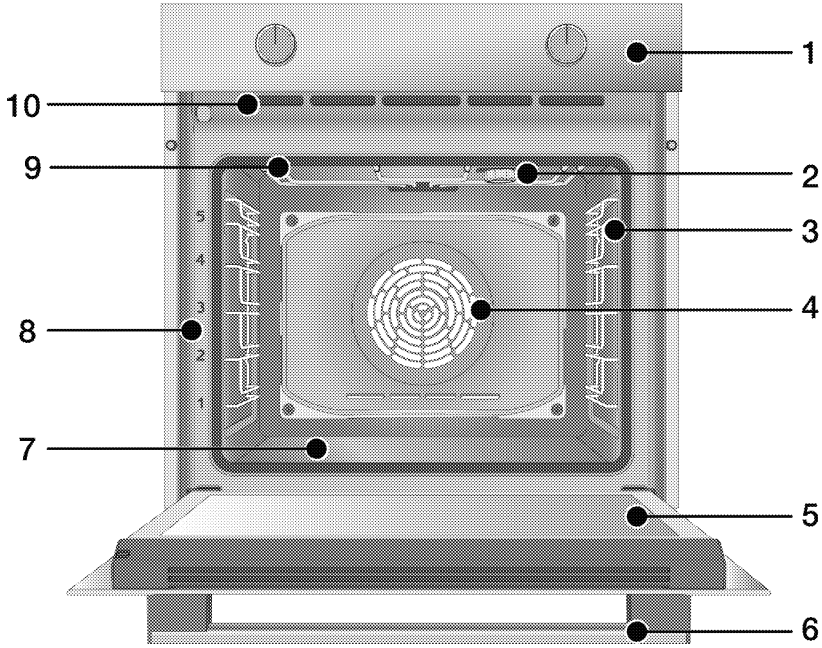

1 Control panel
2 Lamp*
3 Wire shelves**
4 Fan motor (behind steel plate)
5 Door
6 Handle
7 Bottom heater (bottom steel plate)
8 Shelf positions
9 Top heater
10 Ventilation holes

* It depends on the model. Your product may not have a lamp, or the type and location of the lamp may differ from the illustration.

** It depends on the model. Your product may be without wire shelves. In the illustration, wire shelves are shown as examples.

Product control panel introduction and usage

In this section, you can find the overview and basic uses of the product's control panel. There may be differences in images and some features depending on the type of product.

Oven control

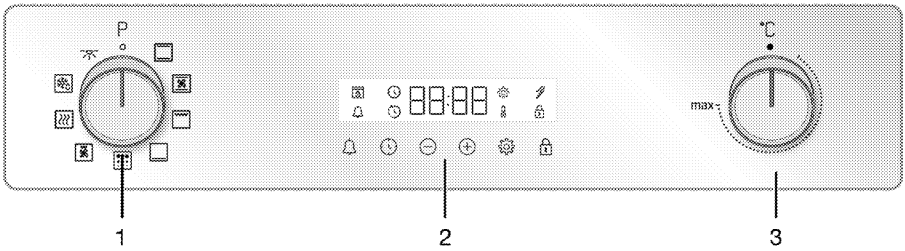

1 Function selection knob
2 Timer
3 Temperature knob

If there are knob (s) controlling your product, these knob (s) may be recessed in the panel that come out when pressed in on some models. For settings to be made with these knobs, first push the relevant knob in and pull out the knob. After making your adjustment, press it in again and replace the knob.

Function selection knob

You can select the oven operating functions with the function selection knob. Turn left / right from closed (top) position to select.

Temperature knob

You can select the temperature you want to cook with the temperature knob. Turn clockwise from the closed (top) position to select.

Temperature indicator

You can see the interior temperature of the oven on the timer screen. The oven heats up until it reaches the set temperature and maintains this temperature and the 3-line heating animation flashes to the far right. When the oven temperature reaches the set value, this animation stops and the “C” symbol appears constantly next to the set temperature value.

Timer

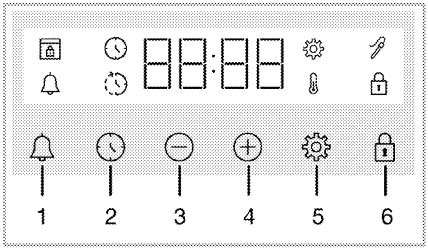

1 Alarm key
2 Time setting key
3 Decrease key
4 Increase key
5 Settings key
6 Key lock key

Display symbols

: Cooking time symbol
: Cooking end time symbol*
: Alarm symbol
: Meat probe symbol*
: Key lock symbol
: Temperature symbol
: Settings symbol
: Door lock symbol*

* It varies depending on the product model. It may not be available on your product.

Oven operating functions

On the function table; the operating functions you can use in your oven and the highest and lowest temperatures that can be set for these functions are shown. The order of the operating modes shown here may differ from the arrangement on your product.

Function symbol	Function description	Temperature range (°C)	Description and use
	Oven lamp	-	No heater works in the oven. Only the oven lamp lights up.
	Operating with fan	-	The oven is not heated. Only the fan (on the back wall) operates. Frozen food with granules is slowly defrosted at room temperature, cooked food is cooled. The time required to thaw a whole piece of meat is longer than the food with grains.
	Top and bottom heating	40-280	Food is heated from above and below at the same time. Suitable for cakes and stews in baking molds or cakes and pastries. Cooking is done with a single tray.
	Bottom heating	40-220	Only lower heating is on. It is suitable for foods that need browning on the bottom.
	Fan assisted bottom/top heating	40-280	The hot air heated by the upper and lower heaters is distributed equally and rapidly throughout the oven with the fan. Cooking is done with a single tray.
	Full grill	40-280	The large grill on the oven ceiling works. It is suitable for grilling in large amounts.
	Fan assisted low grill	40-280	The hot air heated by the small grill is quickly distributed into the oven with the fan. It is suitable for grilling smaller amounts.
	Keeping warm	40-100	It is used to keep the food at a temperature ready for service for a long time.
	Pyrolysis	-	It is used for self-cleaning of the oven at high temperature. Read the explanations in the maintenance and cleaning section for this function.

Product accessories

There are various accessories in your product. In this section, the description of the accessories and the descriptions of the correct usage are available. Depending on the product model, the supplied accessory varies. All accessories described in the user guide may not be available in your product.

NOTICE : The trays in your product may be deformed by the effect of the temperature. This has no effect on the function. Deformation disappears when the tray cools down.

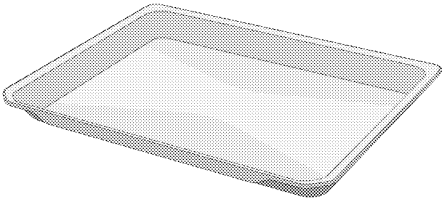

Standard tray
It is used for pastries, frozen foods and frying large pieces.

Models with wire shelves:

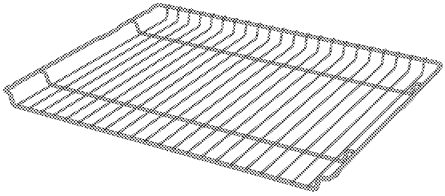

Wire grill
It is used for frying or placing the food to be baked, fried and stewed on the desired shelf.

Models without wire shelves:

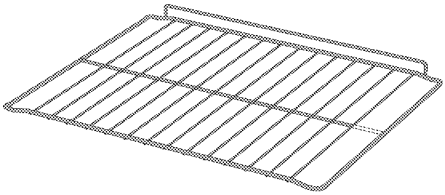

Use of product accessories

Cooking shelves

There are 5 levels of shelf position in the cooking area. You can also see the order of the shelves in the numbers on the front frame of the oven.

Models with wire shelves

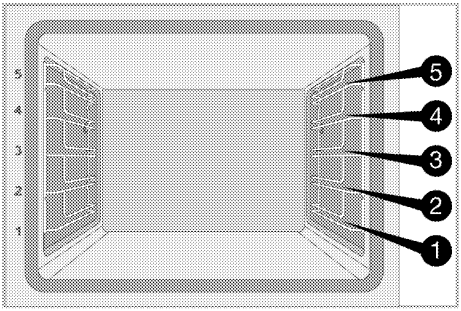

Models without wire shelves

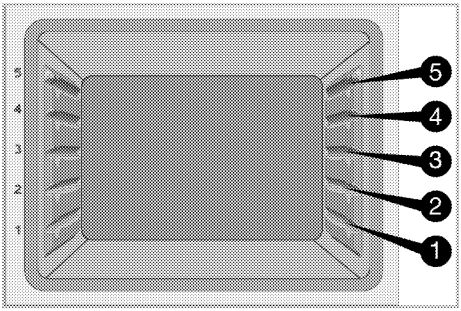

Placing the wire grill on the cooking shelves

Models with wire shelves:

It is crucial to place the wire grill on the wire side shelves properly. While placing the wire grill on the desired shelf, the open section must be on the front. For better cooking, the wire grill must be secured with the stopper on the wire shelf. It must not pass over the stopper to contact with the rear wall of the oven.

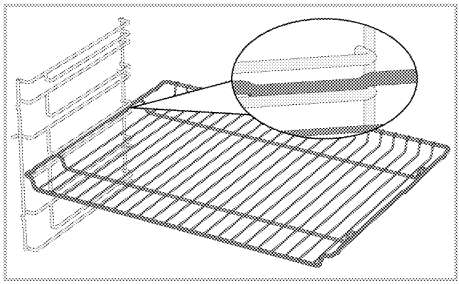

Models without wire shelves:

It is crucial to place the wire grill on the side shelves properly. The wire grill has one direction when placing it on the shelf. While placing the wire grill on the desired shelf, the open section must be on the front.

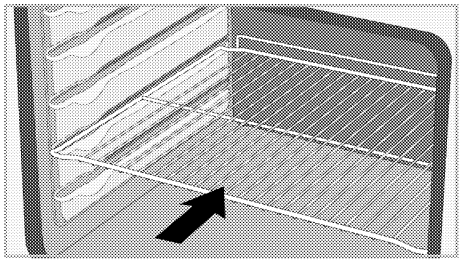

Placing the tray on the cooking shelves

Models with wire shelves:

It is also crucial to place the trays on the wire side shelves properly.

While placing the tray on the desired shelf, its side designed for holding must be on the front.

For better cooking, the tray must be secured with the stopper on the wire shelf. It must not pass over the stopper to contact with the rear wall of the oven.

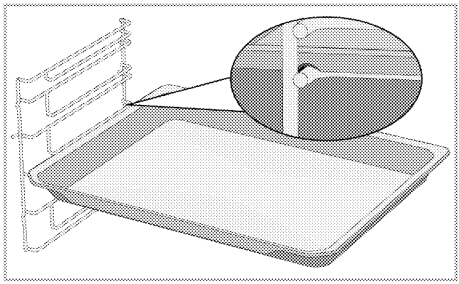

Models without wire shelves:
It is also crucial to place the trays on the side shelves properly. The tray has one direction when placing it on the shelf. While placing the tray on the desired shelf, its side designed for holding must be on the front.

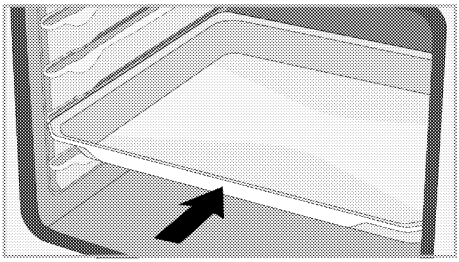

Stopper function of the wire grill
There is a stopper function to prevent the wire grill from tipping out of the wire shelf. With this function, you can easily and safely take out your food. While removing the wire grill, you can pull it forward until it reaches the stopper. You must pass over the stopper to remove it completely.

Models with wire shelves

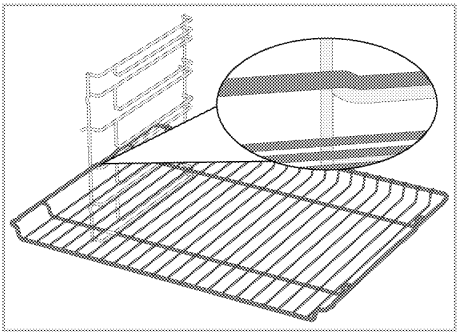

Models without wire shelves

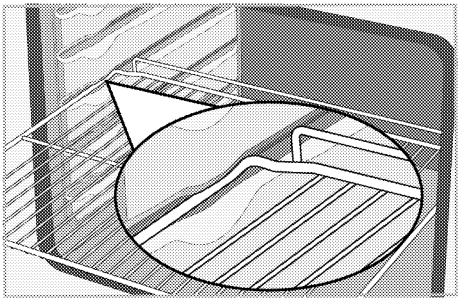

Stopper function of the wire grill tray - Models with wire shelves
There is also a stopper function to prevent the tray from tipping out of the wire shelf. While removing the tray, release it from the rear lock and pull it towards yourself until it reaches the stopper. You must pass over the stopper to remove it completely.

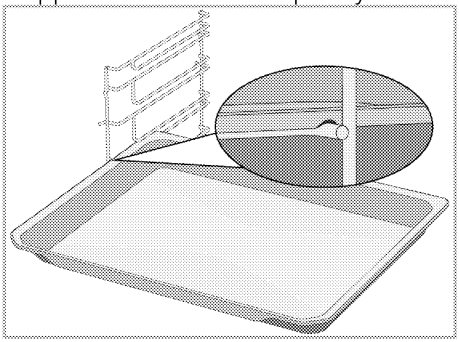

Proper placement of the wire grill and tray on the telescopic rails- Models with wire shelves and telescopic rails

Thanks to telescopic rails, trays or the wire grill can be easily installed and removed. When using trays and wire grills with the telescopic rail, care should be taken that the pins, on the front and back of the telescopic rails, rest against the edges of the grill and the tray (shown in the figure).

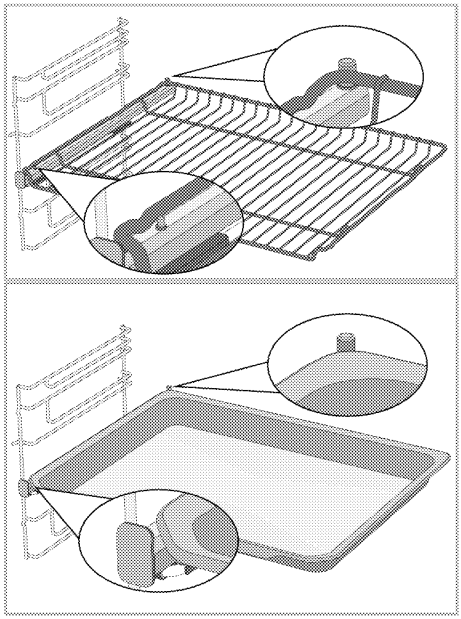

Technical specifications

General specifications	
Product external dimensions (height/width/depth)	595 mm/594 mm/567 mm
Oven installation dimensions (height/width/depth)	590 or 600 mm/560 mm/min. 550 mm
Voltage / frequency	220-240 V ~ 50 Hz
Cable type and cross section used / suitable for use in the product	min. H05VV-FG 3 x 1,5 mm^2
Total power consumption	2,6 kW
Oven type	Fan assisted oven

Basics: Information on the energy label of electrical ovens is given in accordance with the EN 60350-1 / IEC 60350-1 standard. Those values are determined under standard load with bottom-top heater or fan assisted heating (if any) functions.
Energy efficiency class is determined in accordance with the following prioritization depending on whether the relevant functions exist on the product or not: 1-Eco fan heating, 2-Fan Heating 3- Fan assisted low grill, 4-Top and bottom heating.

Technical specifications may be changed without prior notice to improve the quality of the product.

Figures in this manual are schematic and may not exactly match your product.

Values stated on the product labels or in the documentation accompanying it are obtained in laboratory conditions in accordance with relevant standards. Depending on operational and environmental conditions of the product, these values may vary.

4 First use

Before you start using your product, it is recommended to do the following in the following sections.

First time setting

Always set the time of day before using your oven. If you do not set it, you cannot cook in some oven models.

1. When after the oven is energized for the first time, hour field **"12:00"** and ⏲ symbol will flash on the display.
2. Set the time of day by touching ⊕/⊖.

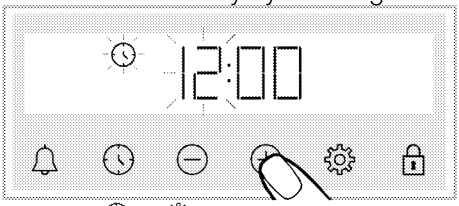

3. Touch ⏲ or ⚙ key to activate the minute field.

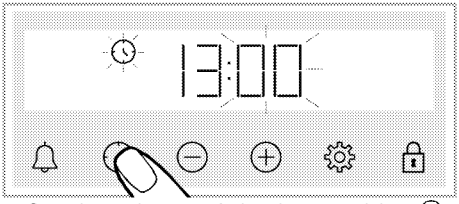

4. Set the minute of day by touching ⊕ /⊖.

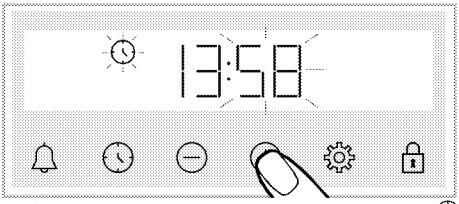

5. Confirm the setting by touching the ⏲ key.

» The time of day is set and the ⏲ symbol disappears on the screen.

If the first time is not set, **"12:00"** and ⏲ symbols continue to flash and your oven will not start. For your oven to work, you must confirm the time of the day by setting the time of the day or touching the ⏲ key when it is at **"12:00"**. You can change the time of day setting later, as described in the "Settings" section.

Current time settings are canceled in case of power failure. It needs to be re-adjusted.

First cleaning

1. Remove all packaging materials.
2. Remove all accessories from the oven provided within the product.
3. Turn the product on for 30 minutes and then, turn it off. This way, residues and layers that may have remained in the oven during production are burned and cleaned.
4. When operating the product, select the highest temperature and the operating function that all the heaters in your product operate. See "Oven operating functions". You can learn how to operate the oven in the following section.
5. Wait for the oven to cool.
6. Wipe the surfaces of the product with a wet cloth or sponge and dry with a cloth.

Before using the accessories;

Clean the accessories you remove from the oven with detergent water and a soft cleaning sponge.

NOTICE The surface might get damaged by some detergents or cleaning materials. Do not use aggressive detergents, cleaning powders/creams or any sharp objects during cleaning.

NOTICE Smoke and smell may emit for a couple of hours during the initial operation. This is quite normal. Ensure that the room is well ventilated to remove the smoke and smell. Avoid directly inhaling the smoke and the smell that emits.

5 How to operate the oven

General information on oven usage

Cooling fan (It may not exist on your product.)

Your product has a cooling fan. The cooling fan is activated automatically when necessary and cools both the front of the product and the furniture. It is automatically deactivated when the cooling process is finished. Hot air comes out over the oven door. Do not cover these ventilation openings with anything. Otherwise, the oven may overheat.

The cooling fan continues to operate during oven operation or after the oven is turned off (approximately 20-30 minutes). If you cook by programming the oven timer, at the end of the cooking time, the cooling fan turns off with all functions. The cooling fan running time cannot be determined by the user. It turns on and off automatically. This is not an error.

Oven lighting

The oven lamp is turned on when the oven starts cooking. In some models, the lamp is on during cooking, while in some models it turns off after a certain time.

In some operating functions, the lamp does not light due to energy savings.

If you want the oven lamp to be lit continuously, select the “Oven lamp” operating function with the function selection knob.

Operation of the oven control unit

General warnings for the oven control unit

Maximum time that can be set for end of cooking is 5 hours 59 minutes.
The maximum time for warm keeping is only 23 hours and 59 minutes.
Program will be cancelled in case of power failure. You must reprogram the oven.

While making any adjustments, the relevant symbols flash on the display. Please wait a short time for the settings to be saved.

If any cooking time has been set, the time of the day cannot be adjusted.

If cooking time is set when cooking starts, the remaining time is displayed on the display.

In cases where cooking time is set; you can cancel automatically by touching the ⏲ key for a long time.

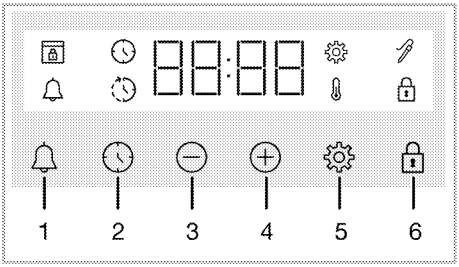

1 Alarm key
2 Time setting key
3 Decrease key
4 Increase key

5 Settings key

6 Key lock key

Display symbols

: Cooking time symbol

: Cooking end time symbol*

: Alarm symbol

: Meat probe symbol*

: Key lock symbol

: Temperature symbol

: Settings symbol

: Door lock symbol*

* It varies depending on the product model. It may not be available on your product.

Turning on the oven

When you select a operating function you want to cook with using the function selection knob and set a certain temperature with using the temperature knob, the oven starts operating.

Turning off the oven

You can turn the oven off by turning the function selection knob and temperature knob to the off (up) position.

Manual cooking to select temperature and oven operating function

You can cook by making a manual control (at your own control) without setting the cooking time by selecting the temperature and operating function specific to your food.

Example:

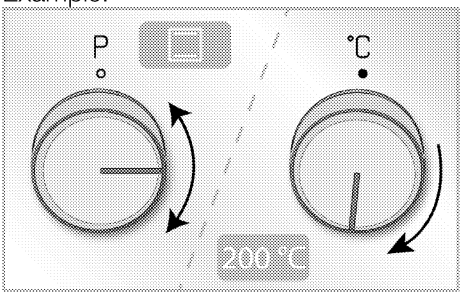

1. Select the operating function you want to cook using the function selection knob.
2. Set the temperature you want to cook using the temperature knob.

» Your oven will start operating immediately at the selected function and temperature and will appear on the display. The set temperature value and 3 line animations appear on the display. Then, the time elapsed since the cooking started appears sequentially. When the temperature inside the oven reaches the set temperature, the symbol disappears ve the timer beeps. The animation of 3 lines on the screen stops and the C symbol appears continuously next to the temperature value. The oven does not switch off automatically since manual cooking is done without setting the cooking time. You have to control cooking yourself and turn it off. When your cooking is completed, turn off the oven by turning the function selection knob and the temperature knob to the off (up) position.

Cooking by setting the cooking time;

You can have the oven turn off automatically at the end of the time by selecting the temperature and operating function specific to your food and setting the cooking time on the timer.

1. Select the operating function for cooking.
2. Touch until the symbol appears on the display for the cooking time.

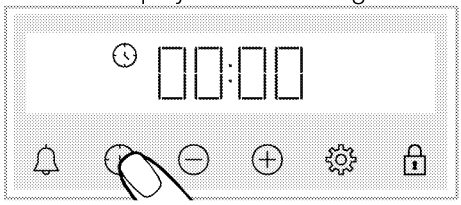

After setting the operation function and temperature, you can set the cooking time for 30 minutes by touching the ⊕ key directly for quick setting of the cooking time and change the time with the ⊕/⊖ keys.

3. Set the cooking time with the ⊕/⊖ keys.

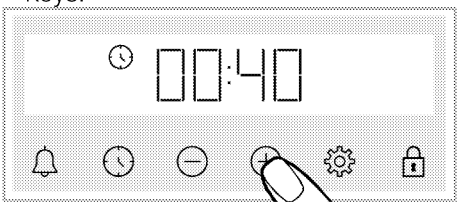

The cooking time increases by 1 minute in the first 15 minutes, after 15 minutes it increases by 5 minutes.

4. Put your food in the oven and set the temperature with the temperature knob.

» Your oven will start operating immediately at the selected function and temperature. The set cooking time starts to count down and 🌡 appears on the display. The countdown cooking time and the set temperature value appear sequentially with 3 line animations next to them. When the temperature inside the oven reaches the set temperature, the 🌡 symbol disappears ve the timer beeps. The animation of 3 lines on the screen stops and the C symbol appears continuously next to the temperature value.

5. After the set cooking time is completed, on the display, **"End"** appears, the ⏲ symbol flashes and the timer beeps.
6. The warning sounds approximately for one minute. Press any key to stop the warning. The warning stops and the time of day appears on the display.

To set the cooking end time to a later time; (It varies depending on the product model. It may not be available on your product.)

By selecting the temperature and operating function specific to your meal, you can set the cooking time and the cooking end time to a later time, allowing the oven to start and turn off automatically.

1. Select the operating function for cooking.
2. Touch ⏲ until the ⏲ symbol appears on the display for the cooking time.

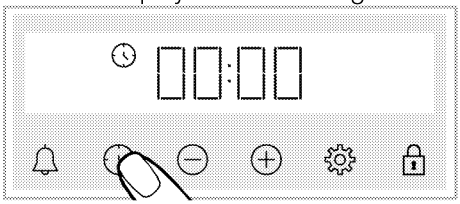

After setting the operation function and temperature, you can set the cooking time for 30 minutes by touching the ⊕ key directly for quick setting of the cooking time and change the time with the ⊕/⊖ keys.

3. Set the cooking time with the ⊕/⊖ keys.

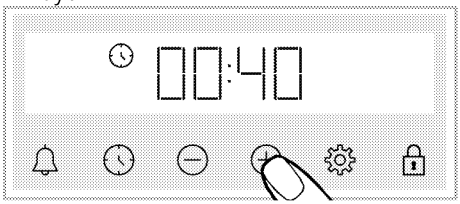

The cooking time increases by 1 minute in the first 15 minutes, after 15 minutes it increases by 5 minutes.

» After the cooking time has been set, the ⏲ symbol is constantly displayed on the display.

4. Touch ⏲ until the ⏲ symbol appears on the display for the cooking end time.

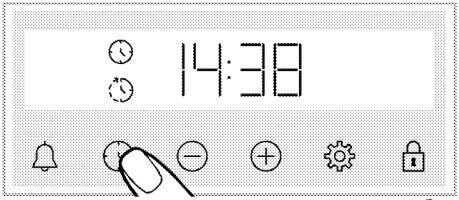

5. Set the cooking end time with the ⊕ /⊖ keys.

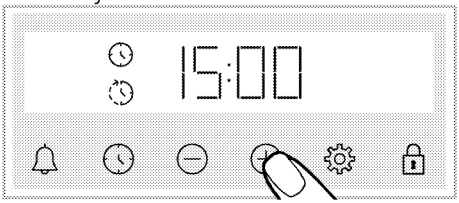

» After the cooking end time is set, the ⏲ symbol and the ⏲ symbol with the time period symbol will appear constantly on the display. As soon as cooking starts, the ⏲ symbol disappears.

6. Put your food in the oven and set the temperature with the temperature knob.

» **The oven time calculates the time to start cooking by subtracting the cooking time from the cooking end time you set.** When the cooking start time comes, the selected function is activated and the oven heats up to the set temperature. The set cooking time starts to count down and 🌡 appears on the display. The countdown cooking time and the set temperature value appear sequentially with 3 line animations next to them. When the temperature inside the oven reaches the set temperature, the 🌡 symbol disappears ve the timer beeps. The animation of 3 lines on the screen stops and the C symbol appears continuously next to the temperature value.

7. After the set cooking time is completed, on the display, **"End"** appears, the ⏲ symbol flashes and the timer beeps

8. The warning sounds approximately for one minute. Press any key to stop the warning. The warning stops and the time of day appears on the display.

ⓘ If any key is pressed at the end of the audible warning, the oven will start operating again. To prevent the oven from operating again at the end of the warning, get the temperature knob and function knob to the **"0"** position (off) and turn the oven off.

Settings

Activating key lock

You can prevent control unit from being intervened with by activating the key lock function.

1. Touch 🔒 until the 🔒 symbol appears on the display.

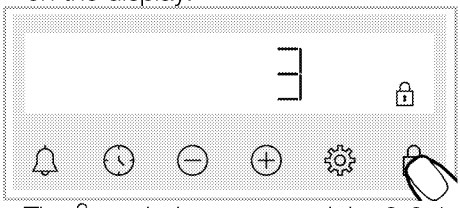

» The 🔒 symbol appears and the 3-2-1 countdown begins on the display. When the countdown is over, the key lock is activated. When any key is touched when the key lock is set, the timer sounds an audible signal and the 🔒 symbol flashes.

ⓘ If you stop touching the 🔒 key before the countdown ends, the key lock will not be activated.

ⓘ Timer keys cannot be used when key lock is on. The key lock will not be canceled in case of power failure.

Deactivating the key lock

1. Touch 🔒 until the 🔒 symbol disappears on the display.

» The 🔒 symbol disappears and the key lock is disabled on the display.

Setting the alarm

You can also use the timer of the product for any warning or reminder other than cooking.

The alarm clock has no effect on the oven operating functions. Used for warning purposes. For example, you can use the alarm clock when you want to turn the food in the oven at a certain time. As soon as the time you set has expired, the clock gives you an audible warning.

Maximum alarm time can be 23 hours and 59 minutes.

1. Touch 🔔 until the 🔔 symbol appears on the display.

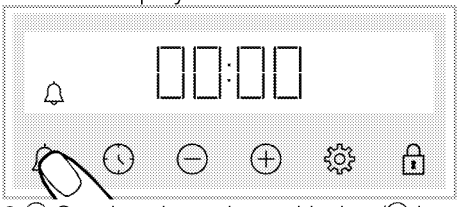

2. ⊕ Set the alarm time with the /⊖ keys.

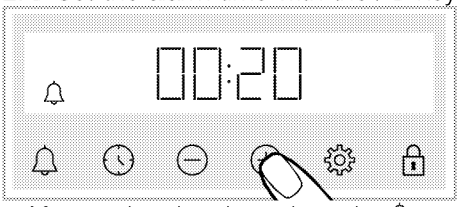

» After setting the alarm time, the 🔔 symbol remains lit and the alarm time starts the countdown the display. If the alarm time and cooking time are set at the same time, the shorter time is displayed on the display.

3. After the alarm time is completed, the 🔔 symbol starts flashing and gives you an audible warning.

Turning off the alarm

1. At the end of the alarm period, the warning audio for two minutes. Touch any key to stop the warning audio.

» The warning audio stops and the time of day appears on the display.

If you want to cancel the alarm;

1. Touch 🔔 until the 🔔 symbol appears on the display to reset the alarm time. Touch the ⊖ key until it shows "00:00".
2. 🔔 you can also cancel the alarm by long pressing the key.

Changing the volume level

1. Touch the ⚙ key until ⚙ symbol and one of the b-01-b-02-b-03 values appears on the display.

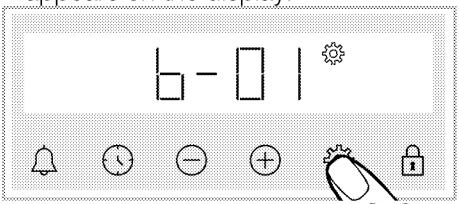

2. Set the desired level with the ⊕/⊖ keys. (b-01-b-02-b-03)

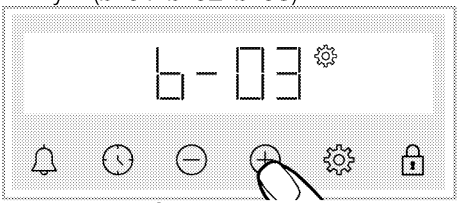

3. Touch the ⚙ key for confirmation, or the setting is activated shortly without touching a key.

Setting the display brightness

1. Touch the ⚙ key until ⚙ symbol one of the d-01-d-02-d-03 values appears on the display.

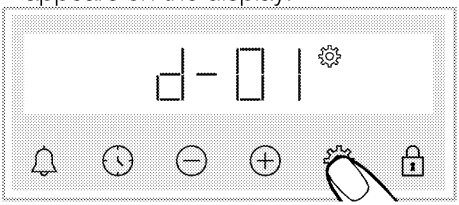

2.Set the desired brightness with the ⊕ /⊖ keys. (d-01-d-02-d-03)

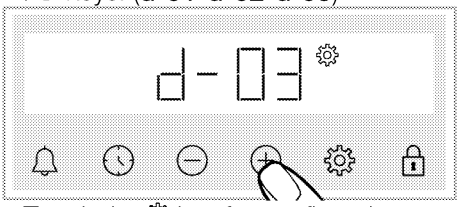

» Touch the ⚙ key for confirmation, or the setting is activated shortly without touching a key.

Changing the time of day

On your oven; to change the time of day that you have previously set,

1.Touch ⚙ until the 🕓 symbol appears on the display.

2.Set the time of day by touching ⊕/⊖.

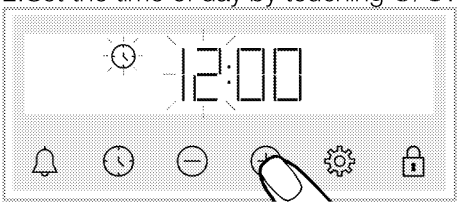

3.Touch 🕓 or ⚙ key to activate the minute field.

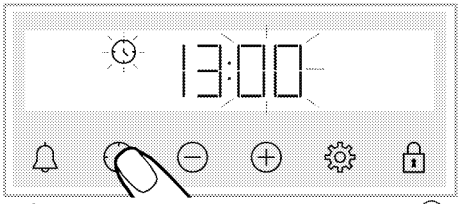

4.Set the minute of day by touching ⊕ /⊖.

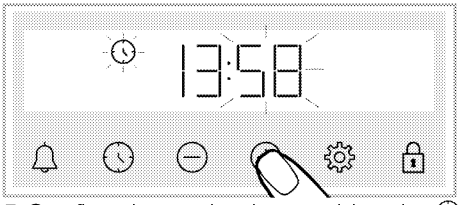

5.Confirm the setting by touching the 🕓 key.

» The time of day is set and the 🕓 symbol disappears on the display.

6 General information about cooking

This section describes tips on preparing and cooking your food.
In addition, you can also find some of the foods tested as producers and the most appropriate settings for these foods. Appropriate oven settings and accessories for these foods are also indicated.

General warnings about cooking in the oven

- While opening the oven door during or after cooking, hot-burning steam may emerge. The steam may burn your hand, face and / or eyes. When opening the oven door, stay away.
- Intense steam generated during cooking may form condensed water drops on the interior and exterior of the oven and on the upper parts of the furniture due to the temperature difference. This is a normal and physical occurrence.
- The cooking temperature and time values given for foods may vary depending on the recipe and amount. For this reason, these values are given as ranges.
- Always remove unused accessories from the oven before you start cooking. Accessories that will remain in the oven may prevent your food from being cooked at the correct values.
- For foods that you will cook according to your own recipe, you can reference similar foods given in the cooking tables.
- Using the supplied accessories ensures you get the best cooking performance. Always observe the warnings and information provided by the manufacturer for the external cookware you will use.
- Cut the greaseproof paper you will use in your cooking in suitable sizes to the container you will cook. Greaseproof papers that are overflowing from the container can create a risk of burns and affect the quality of your cooking. Use the greaseproof paper you will use in the temperature range specified.
- For good cooking performance, place your food on the recommended correct shelf. Do not change the shelf position during cooking.

Pastries and oven food

General Information

- We recommend using the accessories of the product for a good cooking performance. If you are going to use an external cookware, prefer dark, non-sticking and heat resistant ware.
- If preheating is recommended in the cooking table, be sure to put your food in the oven after preheating.
- If you are going to cook using cookware on the wire grill, place it in the middle of the wire grill, not near the back wall.
- All materials used in making pastry should be fresh and at room temperature.
- The cooking status of the products may vary depending on the amount of food and the size of the cookware.
- Metal, ceramic and glass molds extend the cooking time and the bottom surface of pastry foods do not brown evenly.
- If you use cooking paper during cooking, a little browning may be observed on the bottom surface of the food. In this case, you may need to extend your cooking time about 10 minutes.

- The values specified in the cooking tables are determined as a result of the tests carried out in our laboratories. Values suitable for you may differ from these values.
- Place your food on the appropriate shelf recommended in the cooking table. Refer to the bottom shelf of the oven as shelf 1.
- Cook the foods recommended in the cooking table with a single tray.

Tips for baking cakes

- If the cake is too dry, increase the temperature by 10 ° C and shorten the baking time.
- If the cake is moist, use a small amount of liquid or reduce the temperature by 10 ° C.
- If the top of the cake is burnt, put it on the lower shelf, lower the temperature and increase the baking time.
- If it is cooked well inside but the outside is sticky, use a smaller amount of liquid, reduce the temperature and increase the cooking time.

Tips for cooking pastries

- If the pastry is too dry, increase the temperature by 10 ° C and shorten the cooking time. Wet the dough sheets with a sauce consisting of milk, oil, egg and yoghurt mixture.
- If the pastry is getting cooked slowly, make sure that the thickness of the pastry you have prepared does not overflow the tray.
- If the pastry is browned on the surface but the bottom is not cooked, make sure that the amount of sauce you will use for the pastry is not too much at the bottom of the pastry. For an even browning, try to spread the sauce evenly between the dough sheets and the pastry.
- Bake your pastry in the position and temperature appropriate to the cooking table. If the bottom is still not browned enough, place it on a bottom shelf for the next cooking.

Cooking table for pastries and oven food

Food	Accessory to be used	Operating function	Shelf position	Temperature (°C)	Cooking time (min) (approx.)
Cakes in tray	Standard tray*	Top and bottom heating	3	180	30 ... 40
Cakes in mold	Cake mold on wire grill**	Top and bottom heating	2	180	30 ... 40
Small cakes	Standard tray*	Top and bottom heating	3	160	25 ... 35
	Standard tray*	Fan assisted bottom/top heating	**Models with wire shelves:** 3 **Models without wire shelves:** 2	150	**Models with wire shelves:** 25 ... 35 **Models without wire shelves:** 30 ... 40
Sponge cake	Round cake mold, 26 cm in diameter with clamp on wire grill**	Top and bottom heating	2	160	30 ... 38
	Round cake mold, 26 cm in diameter with clamp on wire grill**	Fan assisted bottom/top heating	2	160	25 ... 35
Cookie	Pastry tray*	Top and bottom heating	3	170	25 ... 35
Dough pastry	Standard tray*	Top and bottom heating	2	200	30 ... 40
Rich pastry	Standard tray*	Top and bottom heating	2	200	20 ... 30
Whole bread	Standard tray*	Top and bottom heating	3	200	30 ... 40
Lasagna	Glass / metal rectangular mold on wire grill**	Top and bottom heating	2 or 3	200	30 ... 40
Apple pie	Round black metal mold, 20 cm in diameter on wire grill**	Top and bottom heating	2	180	50 ... 65
Pizza	Standard tray*	Top and bottom heating	2	200 ... 220	10 ... 20

Preheating is recommended for all food.

* These accessories may not be included with your product.

** These accessories are not included with your product. They are commercially available accessories.

Meat, Fish and Poultry

The key points on roasting

- Seasoning it with lemon juice and pepper before cooking all chicken, turkey and large pieces of meat will increase cooking performance.
- It takes 15 to 30 minutes more to cook boned meat than fillet by roasting.
- You should calculate about 4 to 5 minutes of cooking time per centimeter of the meat thickness.
- After the cooking time is over, leave the meat in the oven for about 10 minutes. The juice of the meat is better distributed to the fried meat and does not come out when the meat is cut.
- Fish should be placed on a medium or low level shelf in a heat resistant plate.
- Cook the foods recommended in the cooking table with a single tray.

Cooking table for meat, fish and poultry

Food	Accessory to be used	Operating function	Shelf position	Temperature (°C)	Cooking time (min) (approx.)
Steak (whole) / Roast (1 kg)	Standard tray*	Fan assisted bottom/top heating	3	15 mins. 250/max, then 180 ... 190	60 ... 80
Lamb's shank (1.5 - 2.0 kg)	Standard tray*	Fan assisted bottom/top heating	3	170	85 ... 110
Roasted chicken (1.8-2 kg)	Wire grill* Place one tray on a lower shelf	Fan assisted bottom/top heating	2	15 mins. 250/max, then 190	60 ... 80
Turkey (5.5 kg)	Standard tray*	Fan assisted bottom/top heating	1	25 mins. 250/max, then 180 ... 190	150 ... 210
Fish	Wire grill* Place one tray on a lower shelf	Fan assisted bottom/top heating	3	200	20 ... 30

Preheating is recommended for all food.

* These accessories may not be included with your product.

** These accessories are not included with your product. They are commercially available accessories.

Grill

Red meat, fish and poultry meat will quickly turn brown when grilled, hold a beautiful crust and do not dry out. Fillet meats, skewer meats, sausages as well as juicy vegetables (tomatoes, onions, etc.) are particularly suitable for grilling.

General warnings

- Food not suitable for grilling carries a fire hazard. Grill only food that is suitable for heavy grill fire. Also, do not place the food too far in the back of the grill. This is the hottest area and fatty foods may catch fire.
- Close the oven door during grilling. Never grill with the oven door open. Hot surfaces may cause burns!

The key points of the grill

- Prepare foods of similar thickness and weight as much as possible for the grill.
- Place the pieces to be grilled on the wire grill or wire grill tray by distributing them without exceeding the dimensions of the heater.
- Depending on the thickness of the pieces to be grilled, the cooking times given in the table may vary.

- Slide the wire grill or the wire grill tray to the desired level in the oven. If you are cooking on the wire grill, slide the oven tray to the lower shelf to collect the oils. The oven tray you are going to slide should be sized to cover the entire grill area. This tray may not be included with the product. Put some water into the oven tray for easy cleaning.

Grilling table

Food	Accessory to be used	Shelf position	Temperature (°C)	Cooking time (min) (approx.)
Fish	Wire grill	4 - 5	250/max	20 ... 25
Chicken pieces	Wire grill	4 - 5	250/max	25 ... 35
Meatball (beef) - 12 pieces	Wire grill	4	250/max	20 ... 30
Lamb chop	Wire grill	4 - 5	250/max	20 ... 25
Steak - (sliced)	Wire grill	4 - 5	250/max	25 ... 30
Veal chop	Wire grill	4 - 5	250/max	25 ... 30
Vegetable gratin	Wire grill	4 - 5	220	20 ... 30
Toast bread	Wire grill	4	250/max	1 ... 3

It is recommended to preheat for 5 minutes for all grilled food.
Turn pieces of food after 1/2 of the total grilling time.

Fan assisted low grill

Food	Accessory to be used	Operating function	Shelf position	Temperature (°C)	Cooking time (min) (approx.)
Fish	Wire grill	Fan assisted low grill	4	200	30 ... 35
Chicken pieces	Wire grill	Fan assisted low grill	4	250	25 ... 35
Meatball (beef) - 12 pieces	Wire grill	Fan assisted low grill	4	250	30 ... 40
Steak (whole) / Roast (1 kg)	Wire grill Place one tray on a lower shelf	Fan assisted low grill	3	15 mins. 250, then 180 ... 190	90 ... 110

Do not preheat for all grilled food in this grill table.

Test foods

- Foods in this cooking table are prepared according to the EN 60350-1 standard to facilitate testing of the product for control institutes.
- Cook the foods recommended in the cooking table with a single tray.

Cooking table for test foods

Food	Accessory to be used	Operating function	Shelf position	Temperature (°C)	Cooking time (min) (approx.)
Shortbread (sweet cookie)	Standard tray*	Top and bottom heating	3	140	20 ... 30
Small cakes	Standard tray*	Top and bottom heating	3	160	25 ... 35
	Standard tray*	Fan assisted bottom/top heating	**Models with wire shelves**: 3 **Models without wire shelves** : 2	150	**Models with wire shelves**: 25 … 35 **Models without wire shelves**: 30 … 40
Sponge cake	Round cake mold, 26 cm in diameter with clamp on wire grill**	Top and bottom heating	2	160	30 ... 38
	Round cake mold, 26 cm in diameter with clamp on wire grill**	Fan assisted bottom/top heating	2	160	25 ... 35
Apple pie	Round black metal mold, 20 cm in diameter on wire grill**	Top and bottom heating	2	180	50 … 65

Preheating is recommended for all food.
* These accessories may not be included with your product.
** These accessories are not included with your product. They are commercially available accessories.

Grill

Food	Accessory to be used	Shelf position	Temperature (°C)	Cooking time (min) (approx.)
Toast bread	Wire grill	4	250/max	1 ... 3
Meatball (beef) - 12 pieces	Wire grill	4	250/max	20 ... 30

Turn the food after 1/2 of the total grilling time.
It is recommended to preheat for 5 minutes for all grilled food.

7 Maintenance and care

General cleaning information

⚠ General warnings

- Wait for the product to cool before cleaning the product. Hot surfaces may cause burns!
- Do not apply the detergents directly on the hot surfaces. This may cause a permanent stains.
- The appliance shall be thoroughly cleaned and dried after each operation. Thus, food residues shall be easily cleaned and these residues shall be prevented from burning when the appliance is used again later. Thus, the service life of the appliance extends and frequently faced problems are decreased.
- Do not use steam cleaning products for cleaning.
- Some detergents or cleaning agents may damage the surface. Do not use abrasive detergents, cleaning powders, cleaning creams, descalers or sharp objects during cleaning.
- There is no need for a special cleaning agent for cleaning after each use. Clean the appliance using dish soap, warm water and a soft cloth or sponge and dry with a dry microfiber cloth.
- Be sure to completely wipe off any remaining liquid after cleaning and immediately clean any food splashing around during cooking.
- Do not wash any component of your appliance in a dishwasher.

Inox and stainless surfaces

- Do not use acid or chlorine-containing cleaning agents to clean stainless or inox surfaces and handles.
- Stainless or inox surface may change colour in time. This is normal. After each operation, clean with a detergent suitable for the stainless or inox surface.
- Clean with a soft soapy cloth and liquid (non-scratching) detergent suitable for inox surfaces, taking care to wipe in one direction.
- Remove lime, oil, starch, milk and protein stains on the inox-stainless and glass surfaces immediately without waiting. Stains may rust under long periods of time.

Enamelled surfaces

- After each use, clean the enamel surfaces using dishwashing detergent, warm water and a soft cloth or sponge and dry them with a dry cloth.
- If your product has an easy steam cleaning function, you can make easy steam cleaning for light non-permanent dirt. (See the "Easy steam cleaning" section)
- For persistent stains, the oven and grill cleaner recommended on the website of your product brand and a non-scratching scouring pad can be used. Do not use an external oven cleaner.
- The oven must cool down for cleaning in the cooking area. Cleaning on hot surfaces shall create both fire hazard and damage with enamel surface.

Catalytic surfaces

- The side walls in the cooking area can only be covered with enamel or catalytic walls. It varies by model.
- The catalytic walls have a light matte and porous surface. The catalytic walls of the oven should not be cleaned.
- Catalytic surfaces absorb oil thanks to its porous structure and start to shine

when the surface is saturated with oil, in this case it is recommended to replace the parts.

Glass surfaces

- When cleaning glass surfaces, do not use hard metal scrapers and abrasive cleaning materials. They can damage the glass surface.
- Clean the appliance using dishwashing detergent, warm water and a microfiber cloth specific for glass surfaces and dry it with a dry microfiber cloth.
- If there is residual detergent after cleaning, wipe it with cold water and dry with a clean and dry microfiber cloth. Residual detergent residue may damage the glass surface next time.
- Under no circumstances should the dried-up residue on the glass surface be cleaned off with serrated knives, wire wool or similar scratching tools.
- You can remove the calcium stains (yellow stains) on the glass surface with the commercially available descaling agent, with a descaling agent such as vinegar or lemon juice.
- If the surface is heavily soiled, apply the cleaning agent on the stain with a sponge and wait a long time for it to work properly. Then clean the glass surface with a wet cloth.
- Discolorations and stains on the glass surface are normal and not defects.

Plastic parts and painted surfaces

- Clean plastic parts and painted surfaces using dishwashing detergent, warm water and a soft cloth or sponge and dry them with a dry cloth.
- Do not use hard metal scrapers and abrasive cleaners. It may damage the surfaces.
- Ensure that the joints of the components of the appliance are not left as damp and with detergent. Otherwise, corrosion may occur on these joints.

Cleaning the accessories

Unless otherwise stated in the user manual, do not wash the product accessories in the dishwasher.

Cleaning the control panel

- When cleaning the panels with knob control, wipe the panel and knobss with a damp soft cloth and dry with a dry cloth. Do not remove the knobs and gaskets underneath to clean the control panel. The control panel and knobs may be damaged.
- While cleaning the inox panels with knob control, do not use inox cleaning agents around the knobs. The indicators around the knobs may be deleted.
- Clean the touch control panels with a damp soft cloth and dry with a dry cloth. If your product has a key lock feature, set the key lock before performing control panel cleaning. Otherwise, incorrect detection may occur on the keys.

Cleaning the inside of the oven (cooking area)

Follow the cleaning steps described in the "General cleaning information" section according to the surface types in your oven.

Cleaning the side walls of the oven

The side walls in the cooking area can only be covered with enamel or catalytic walls. It varies by model. If there is a catalytic wall, refer to the "Catalytic walls" section for information.
If your product is a side rack model, remove the side racks before cleaning your side walls. Then complete the cleaning as described in the "General

cleaning information" section according to the side wall surface type.

To remove the side racks:

1. Remove the front of the side rack by pulling it on the side wall in the opposite direction.
2. Pull the side rack towards you to remove it completely.

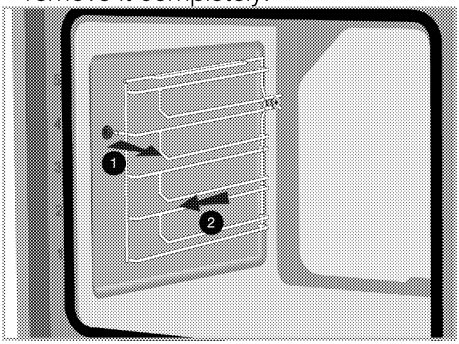

3. To reattach the shelves, the procedures applied when removing them must be repeated from the end to the beginning, respectively.

Pyrolytic self-cleaning

The oven is equipped with pyrolytic self-cleaning. The oven is heated to approx. 420-480 °C and existing dirt is burned to ashes. A strong smoke development may arise. Provide for good ventilation. The pyrolysis should be used after approx. every 10th oven usage.

General warnings

Hot surfaces cause burns! Do not touch the product during self cleaning step and keep children away from it. Keep at least 30 minutes before removing the remnants.

Remove all accessories, telescopic shelf and side racks (if available) prior to using the Pyrolytic self-cleaning function. Failure to do so will result in damage to the accessories and side racks.

If your product is equipped with a pyro proof accessory (Resilient against self-cleaning at high temperatures), you do not need to remove these accessories from the oven. Whether your accessories are pyro-proof or not is specified in the accessories section. Unless specified, your accessories are not resistant to high temperatures. It must be removed from the oven before self-cleaning to avoid damage.

Do not clean the door gasket. Fiberglass gasket is highly sensitive and can get damaged easily.
In case of a damage on the oven door gasket, replace with the new one from the authorised service.

1. Remove all accessories from the oven. In models with side rack; do not forget to take out the side racks.
2. Before the cleaning cycle, remove dirts from exterior surfaces and oven interior with a damph cloth.
3. Select the "Pyrolysis" function (self-cleaning).

P2:00 will flash on the display.

4. Set the temperature knob to the highest **"max" (maximum)** temperature.

5. Once the pyrolysis function starts, P2:00 will light up constantly and start to count down. The self-cleaning time appears in the display. This duration can not be adjusted.
6. When the oven reaches a certain temperature after the self-cleaning process starts, the lock symbol appears on the time display and oven door cannot be opened. It remains locked for a while after the pyrolysis function ends. Do not force the door lock with handle until lock symbol disappears.
7. When the cleaning process is completed, "End" appears on the screen.
8. After "End" is displayed end the process by setting the function and temperature buttons to 0 (OFF) position.
9. After the symbol disappears on the display, remove soil deposits with vinegar water.
10. Touch any key to silence the audio alarm.

Once the pyrolysis function is complete, the door lock will be active until the oven cools down to a suitable temperature. If you want to cook something during this process, "H" will be displayed and cooking will not be allowed.

Cleaning the oven door

Do not use harsh abrasive cleaners, metal scrapers, wire wool or bleach materials to clean the oven door and glass.

You can remove your oven door and door glasses to clean them. How to remove the doors and windows is explained in the sections "Removing the oven door" and "Removing the inner glasses of the door". After removing the door inner glasses, clean them using a dishwashing detergent, warm water and a soft cloth or sponge and dry them with a dry cloth. Wipe the glass with vinegar and then rinse it against lime residues that may occur on the oven glass.

Removing the oven door

1. Open the oven door.
2. Open the clips in the front door hinge socket on the right and left by pressing downwards as shown in the figure.

The hinge type (A), (B), (C) varies according to the product model. The figures below show how to open all hinge types.

(A) type hinge is available in normal door types.

(B) type hinge is available in soft closing door types.

(C) type hinge is available in soft opening/closing door types.

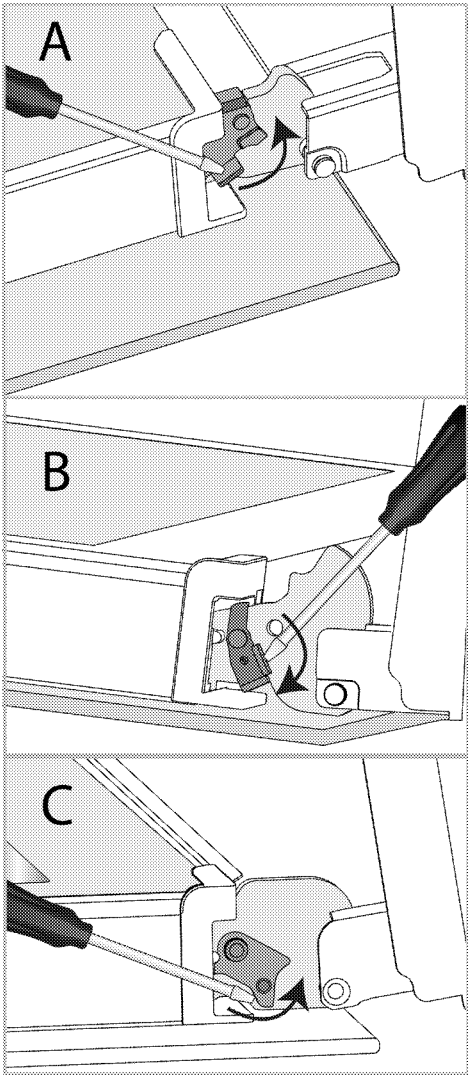

Hinge lock - closed position

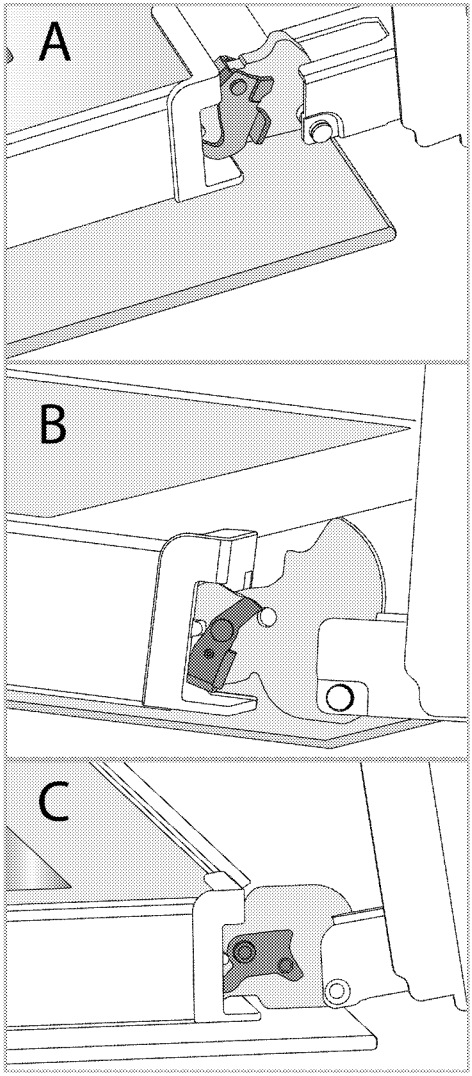

Hinge lock - open position

3. Get the oven door to a half-open position.

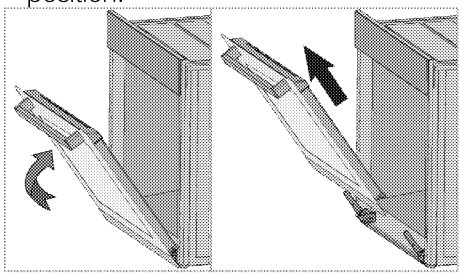

4. Pull the removed door upwards to release it from the right and left hinges and remove it.

To reattach the door, the procedures applied when removing it must be repeated from the end to the beginning, respectively. When installing the door, be sure to close the clips on the hinge socket.

Removing the inner glass of the oven door

Inner glass of the product's front door of may be removed for cleaning.

1. Open the oven door.

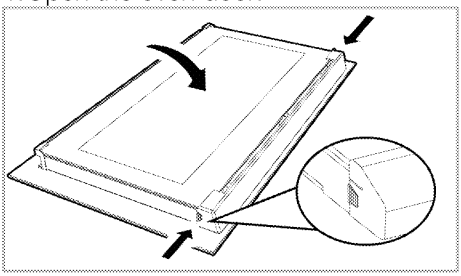

2. Pull the plastic component, attached on the upper section of the front door, towards yourself by simultaneously pressing on the pressure points on both sides of the component and remove it.

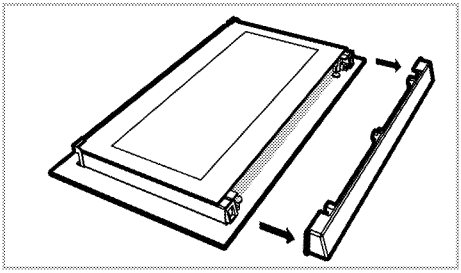

3. As shown in the figure, gently lift the innermost glass towards 'A' and then, remove it by pulling towards 'B'.

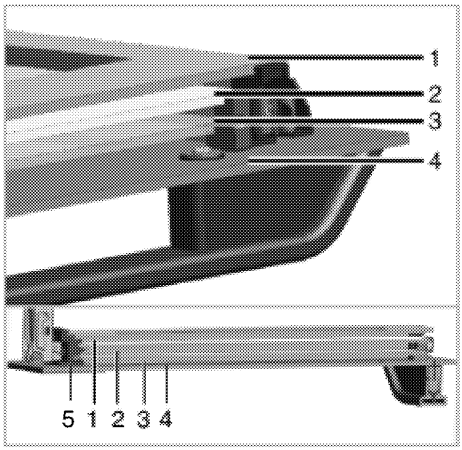

1 Innermost glass
2 Second inner glass
3 Third inner glass
4 Outer glass
5 Plastic glass slot-Lower

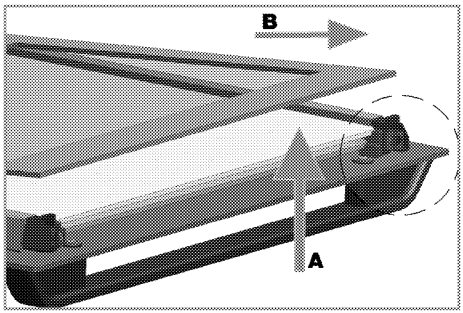

4. Repeat the same process for removing the second and third glasses.

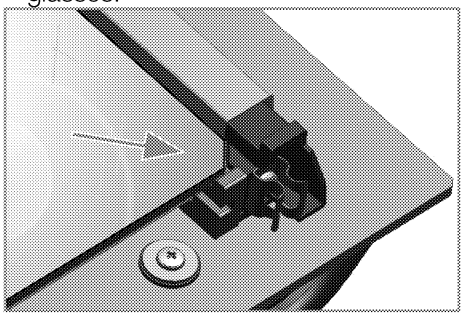

The first step of regrouping the door is to replace the second and third glasses (2, 3).

As shown in the figure, place the beveled edge of the glass to meet the beveled edge of the plastic slot.
The attachment order of the second and third inner glasses is not important, as they are interchangeable.
While attaching the innermost glass (1), pay attention to place the printed side of the glass on the second inner glass.
It is crucial to place the lower corners of all inner glasses to meet the lower plastic slots (5).
Push the plastic component towards the frame until a "click" sound is heard.

After cleaning, all glasses must be reassembled.

Cleaning the oven lamp

In the event that the glass door of the oven lamp in the cooking area becomes dirty; clean using dishwashing detergent, warm water and a soft cloth or sponge and dry with a dry cloth. In case of oven lamp failure, you can replace the oven lamp by following the sections that follow.

Replacing the oven lamp

⚠ General warnings

- To avoid the risk of electric shock before replacing the oven lamp, disconnect the electrical connector and wait for the oven to cool. Hot surfaces may cause burns!
- In this oven, an incandescent lamp with a power of less than 40 W, a height of less than 60 mm, a diameter of less than 30 mm or a halogen lamp with socket type G9, a power of less than 60 W is used. The lamps are suitable for operation at temperatures above 300 °C. Oven lamps can be obtained from Authorised Service Agents or technician with licence.
- The position of the lamp may differ from that is shown in the figure.
- The lamp used in this product is not suitable for use in the lighting of home rooms. The purpose of this lamp is to help the user see food products.
- The lamps used in this product must withstand extreme physical conditions such as temperatures above 50 ° C.

If your oven has a round lamp,

1. Disconnect the product from the electricity.
2. Remove the glass cover by turning it counterclockwise.

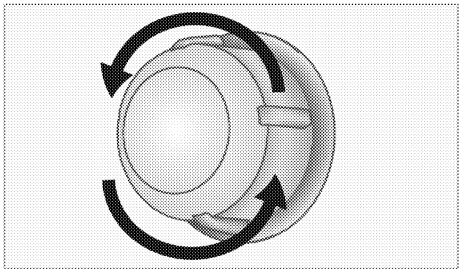

3. If your oven lamp is type (A) shown in the figure below, rotate the oven lamp as shown in the figure and replace it with a new one. If type (B) is a model, pull it out as shown in the figure and replace it with a new one.

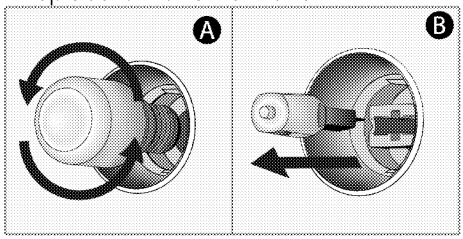

4. Refit the glass cover.

If your oven has a square lamp,

1. Disconnect the product from the electricity.
2. Remove the wire shelves according to the description.

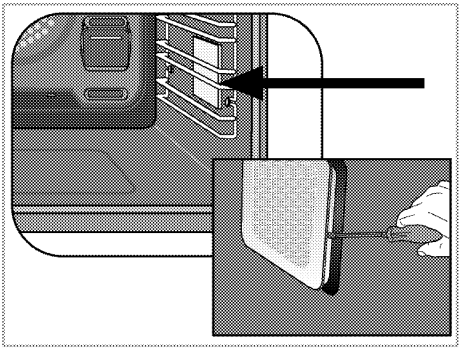

3. Lift the lamp's protective glass cover with a screwdriver.
4. If your oven lamp is type (A) shown in the figure below, rotate the oven lamp as shown in the figure and replace it with a new one. If type (B) is a model, pull it out as shown in the figure and replace it with a new one.

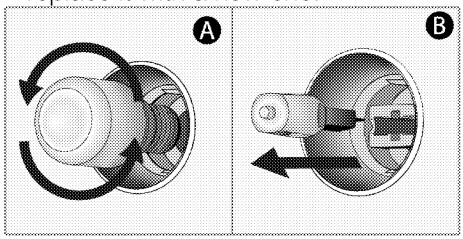

5. Refit the glass cover and wire shelves.

8 Troubleshooting

Consult the Authorised Service Agent or technician with license or the dealer where you have purchased the product if you cannot remedy the trouble although you have implemented the instructions in this section. Never attempt to repair a defective product yourself.

Oven emits steam when it is in use.

- It is normal that steam escapes during operation. >>> *This is not a fault.*

Water drops occur during cooking.

- The vapour that arises during cooking can condense and form water droplets when it hits cold surfaces of the product. >>> *This is not a fault.*

Product emits metal noises while heating and cooling.

- When the metal parts are heated, they may expand and cause noise. >>> *This is not a fault.*

Product does not operate.

- The mains fuse is defective or has tripped. >>> *Check fuses in the fuse box. If necessary, replace or reset them.*
- Product is not plugged into the (grounded) socket. >>> *Check the plug connection.*
- Buttons/knobs/keys on the control panel do not function. >>> *If your product equipped with key lock function,keylock may be enabled. Please disable it.*

Oven light does not work.

- Oven lamp is defective. >>> *Replace oven lamp.*
- Power is cut. >>> *Check if there is power. Check the fuses in the fuse box. If necessary, replace or reset the fuses.*

Oven does not heat.

- Might not be set to a certain cooking function and/or temperature. >>> *Set the oven to a certain cooking function and/or temperature.*
- In models equipped with a timer, the timer is not adjusted. >>> *Adjust the time.*
- Power is cut. >>> *Check if there is power. Check the fuses in the fuse box. If necessary, replace or reset the fuses.*
- The oven door might be open. >>> *Make sure the oven door is closed. If the oven door remains open for more than approx. 5 minutes, the cooking time settings will be canceled, the heaters will not work and oven lamp will not light.*

(In models with timer) Clock display is blinking or clock symbol is on.

- A previous power outage has occurred. >>> *Adjust the time / Switch of the product and switch it on again.*

Error codes/reasons and possible solutions

Error codes	Error reasons	Possible solutions
Er 1 - Er 7	Communication errors	Contact the authorized service to eliminate the error.
Er 8 - Er 27	Sensor errors	Contact the authorized service to eliminate the error.
Er 32 - Er 41	Oven heating errors	Contact the authorized service to eliminate the error.
Er 42 - Er 58	Oven component errors	Contact the authorized service to eliminate the error.
Er 59 - Er 64	Oven door errors	Contact the authorized service to eliminate the error.
Er 65 - Er 71	Steam related errors (in ovens with steam function)	Contact the authorized service to eliminate the error.
Er 72 - Er 80	Hardware errors	Contact the authorized service to eliminate the error.
Er 81 - Er 85	Oven safety errors	Contact the authorized service to eliminate the error.
Er 86 - Er 88	Internet connection errors (in ovens with Homewhiz function)	Contact the authorized service to eliminate the error.
Er 89 - Er 92	Microwave errors (in ovens with microwave function)	Contact the authorized service to eliminate the error.
Er 93 - Er 99	Electronic board and timer errors	Contact the authorized service to eliminate the error.