mm [inch]

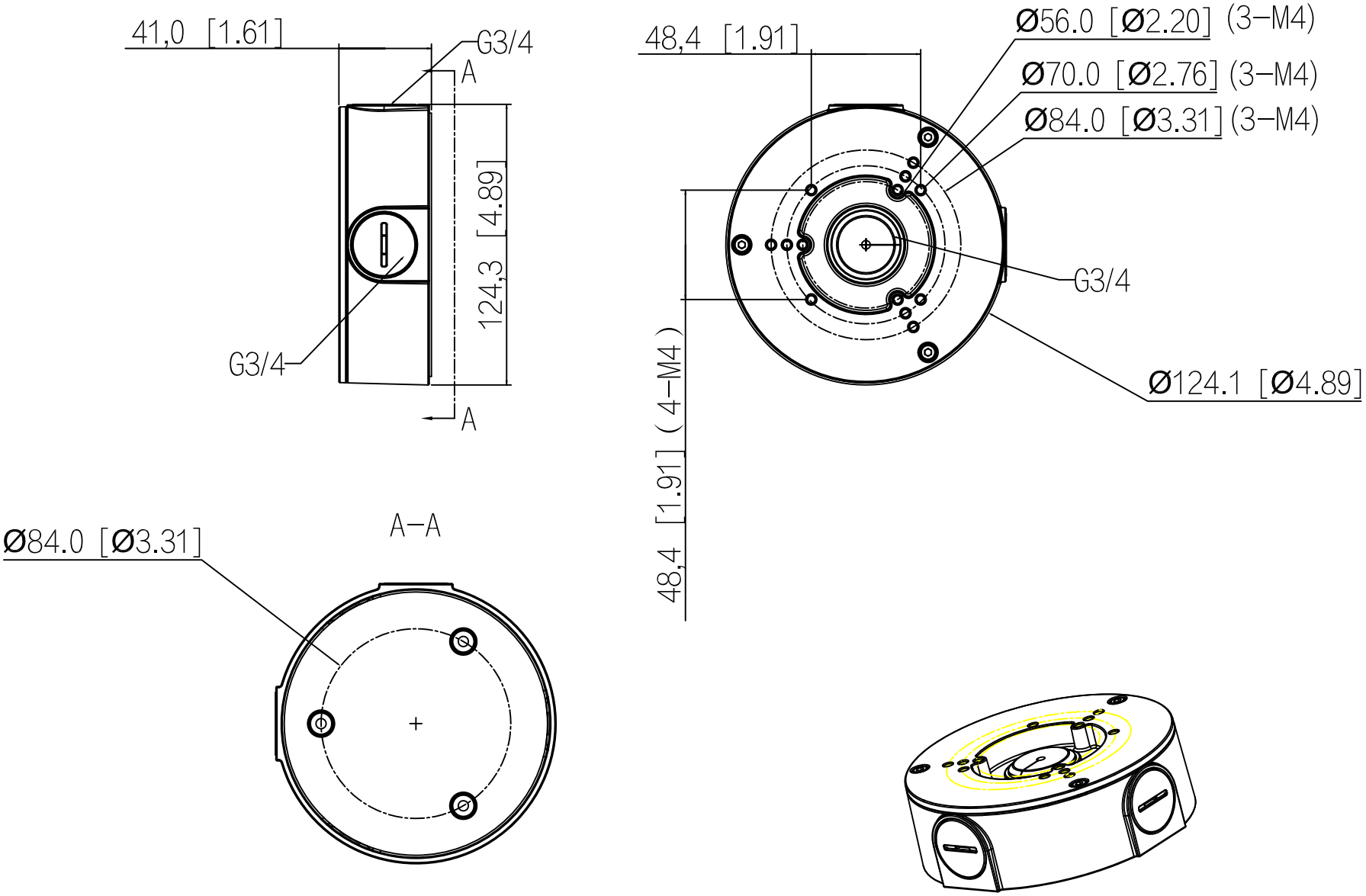
41,0 [1.61]
G3/4
A
124,3 [4.89]
G3/4
A
48,4 [1.91]
Ø56.0 [Ø2.20] (3-M4)
Ø70.0 [Ø2.76] (3-M4)
Ø84.0 [Ø3.31] (3-M4)
G3/4
Ø124.1 [Ø4.89]
48,4 [1.91] (4-M4)
A-A
Ø84.0 [Ø3.31]